ZYFA
Recessed
A8-ZYFA-RCD

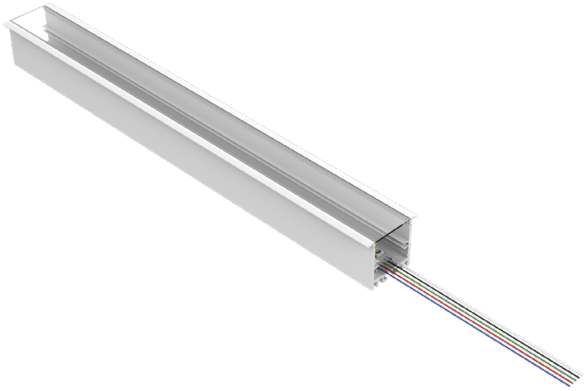

READ ENTIRE GUIDE BEFORE STARTING INSTALLATION

Important Notice: Verify correct luminaire was received with correct color temperature, voltage, and wattage before cutting or installing. ALUZ will not be responsible if incorrect luminaire is installed.

END VIEW / DIMENSIONS

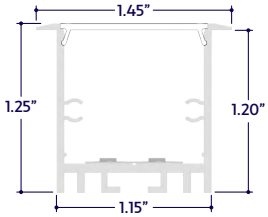

GENERAL FEATURES

Applications	Accent, Decorative, Surface, Recessed, Pendant Lighting
Lens	Clear, 50% Semi-Frosted, or 100% Frosted
Viewing Angle	120°
Length	Built to Order (+/- 1/8" Tolerance)
Construction	Aluminum Extrusion
Weight	0.275 lbs per foot
Mounting	Mounting Channel or Mounting Clips (Sold Separately)
Driver	Remote (Sold Separately)
Listing	Dry Location UL2108, CSA C22.2 #9 UL8750, CSA250
Temperature Ratings	Operating / Startup: -20° to 48°C (-4° to 120°F) Storage: -40° to 76°C (-40° to 170°F)
Installation Link	Link to Installation Instructions

ELECTRICAL

Dimming	DMX
Maximum Run (Class 1 Applications)	10' (11W) 13' (9W)
Maximum Run (Class 2 Applications)	8' (11W) 10' (9W)
Luminaire Voltage	24V DC

PRODUCT INFORMATION

- For accent, decorative, surface, recessed, or pendant lighting.
- 24 Volts DC for easy and safe installation.
- Long life, energy efficient LEDs.
- Can be ordered to specific lengths for when exact dimensions are known
  Example: 10 x 6'6"
- Plug and light system.
- Lead wires are typically 36" long and exit on one end.

ELECTRICAL REQUIREMENTS

- Luminaires require a 24 Volt DC remote driver.
- To calculate driver size, determine Watts per Foot.
  Example: 9W per Foot
- Determine Length in Feet.
  Example: 5'
- Calculate Load: Multiply Watts per Foot x Length in Feet
  Example: 9W x 5' = 45W
- Choose a driver from catalog.
  Example: 60 Watt Driver
- Determine maximum driver distance using Maximum Wire Length Table on drivers page.
  Example: 45 watts is between 40W and 60W. Using #14 wire, maximum distance is 37' from driver to first LED.

INSTALLATION RECOMMENDATIONS

- Luminaires must be mechanically attached directly to mounting surface using mounting clips, channels, or other appropriate means. Refer to installation step by step pages for details.
- Conduit raceway should be sleeved at one end for low voltage wires going to driver.

INSTALLATION TOOLS REQUIRED

- Electric Hammer Drill
- 14.4 to 28 Volt Cordless Drill
- Phillips Bits
- Utility Knife
- Electrical Cord
- Marker
- Wire Stripper
- Long Nose Pliers
- Drill Bits - Concrete or Wood
- Electrical Three Ways
- Safety Glasses
- Measuring Tape
- Laser Line or Chalk Line

ALUZ
1170 North Red Gum Street, Anaheim, CA 92806
Phone: 800 921 2254 or 714 535 7900 | Fax: 714 535 7902 | info@aluz.lighting | aluz.lighting
© ALUZ All rights reserved. ALUZ reserves the right to make changes or withdraw specifications without prior notice.

WARNING

When using LED Lightstrip for any application, basic safety precautions should always be followed to reduce the risk of fire, electric shock, and personal injury. LED Lightstrip must be installed in accordance with the NEC or CEC as applicable. ALUZ will not be responsible for any damage or malfunction caused by the following:

- Ensure power is off before installation begins, during replacements, additions, or repairs.
- Do not use LED Lightstrip if damaged, such as broken boards, loose connections, or frayed wire insulation. Inspect before installing.
- Do not install LED Lightstrip in hazardous locations.
- Do not cover LED Lightstrip with any material, as it may cause LEDs to overheat, melt, or ignite. **(Fig. 1)**
- Do not paint on or over fixture lens or LEDs.
  Paint or any other substance on lens or LEDs will cause a shift in color temperature.
- Soffit must be evenly painted with a neutral white to avoid color shift.
- Do not modify LED Lightstrip in the field.
- Do not overlap LED Lightstrip luminaires in any way.
- Only use LED Lightstrip with specified rated voltages. Do not exceed the specified voltage for any LED Lightstrip luminaire.
- Do not use LED Lightstrip extrusion as a raceway for additional wire. Non-factory feed through wires inside LED Lightstrip will void warranty.
- Ground Fault Circuit Interrupter (GFCI) protections should be provided on circuits or outlets when LED Lightstrip is used for outdoor applications.
- Surge protector must be set up for electrical power system to avoid damaging LED Lightstrip lighting system.
- Do not connect wires together, follow provided wiring diagrams.
- Do not cut wire while energized.
- Do not connect LED Lightstrip lightstrip to power source while spooled or coiled. **(Fig. 2)**
- Do not exceed maximum run lengths.
- Do not mount LED Lightstrip with staples, nails, or like means that might damage the insulation.
  Mount with double-sided tape and mounting clips.
- Do not install mounting clips over LED diodes. **(Fig. 3)**
- Do not penetrate LED Lightstrip lightstrip with any foreign object. **(Fig. 4)**
- Do not mount LED Lightstrip inside tanks or enclosures of any kind.
- Do not use improper screw head type on mounting clips. It will cause the mounting clip to open up and become dysfunctional.
- Do not modify mounting clips.
- Do not mount fixture with less than the minimum number of mounting clips required.
  See mounting clips section for details.
- Do not force LED Lightstrip into a space that is too small.
- Do not force LED Lightstrip with cord grip into soffit.
- Do not install LED Lightstrip at an angle within a cove. Only install fixtures straight within a cove.
- Do not bend extrusion around radius.
- Do not submerge dry or wet location LED Lightstrip in any liquid.
- Do not install wet location in outdoor coves without proper drainage. **(Fig. 5)**
- Do not install LED Lightstrip in any area that is continuously exposed to flowing or pooling water, such as underneath drain pipes, sprinklers, fountains, misters, etc.
- Do not install connectors without shrink tube for wet location. **(Fig. 6)**
- Do nut use a lighter or open flame to heat shrink tube. **(Fig. 7)**
- Do not cut, puncture, or penetrate LED Lightstrip aluminum housing, end caps, or lens covers.
- Do not drop, bang, or rest weight upon LED Lightstrip.
- Do not apply excessive pressure to any part of LED Lightstrip lightstrip or LEDs. **(Fig. 8)**
- Do not bend LED Lightstrip power cord or continuous connector past permitted bend radius.
  Bending past permitted bend radius will break the seal of the cordgrip or damage the insulation. 1.5" minimum bend radius. **(Fig. 9)**
- Do not install LED Lightstrip lightstrip in a zig zag fashion. **(Fig. 10)**
- Do not fold, crease, or twist LED Lightstrip lightstrip. **(Fig. 11)**
- Do not bend lightstrip along a horizontal plane. **(Fig. 12)**
- Do not overlap LED Lightstrip at any location. **(Fig. 13)**
- Do not cross or overlap extrusions and twist lightstrip to overlap. **(Fig. 14)**
- Do not install LED Lightstrip in places where the power cord is subject to continuous flexing.
- Do not twist continuous connector or power cord.
- Do not hold, carry, or suspend LED Lightstrip by the power cord.
- Do not install LED Lightstrip on ceilings without mounting clips. **(Fig. 15)**

FIGURES

Fig. 1

Fig. 2
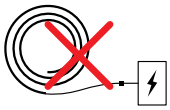

Fig. 3
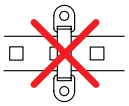

Fig. 4
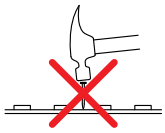

Fig. 5
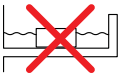

Fig. 6

Fig. 7
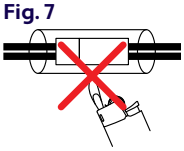

Fig. 8

Fig. 9
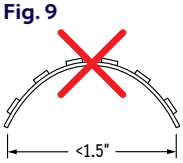

Fig. 10

Fig. 11
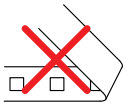

Fig. 12

Fig. 13

Fig. 14
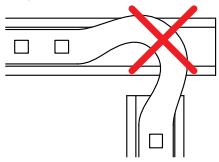

Fig. 15
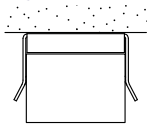

CLEANING MATERIALS

The use of solvents and/or cleaners which are not compatible with polycarbonate will result in the softening, crazing, and/or cracking of the plastic part. This is especially true of polycarbonate lamps and mounting bases which may be under stress in their normal applications.

COMPATIBLE WITH POLYCARBONATE

- Mild soap and water
- Mineral Spirits
- Isobutyl Alcohol
- VM and P Naphtha
- Varsol No.2
- Mexane
- Freone TF and TE-35
- Ethanol
- Dirtex
- 2% Sol. Reg. Joy
- 10% Sol Bon Ami
- White Kerosene
- Methyl Alcohol
- Heptane
- Petroleum Ether / 65°C
- Isopropyl Alcohol
- Lacryl PCL-2035 Polycarbonate Cleaner

NOT COMPATIBLE WITH POLYCARBONATE

- Trichlor
- Gasoline
- Liquid Detergents
- Acetone
- Carbon Tetrachloride
- Pink Lux (Phosphate free)
- Triclene
- Chlorinated Hydrocarbons
- #1 & #3 Denatured Alcohol
- Methyl Ethyl Keytone (MEK)
- Texize-8006, 8129, 8758
- MIBK
- Liquid Cleaner – 8211
- Toluol
- Agitene
- Benzol
- Ajax
- Kleenol Plastics
- Lysol
- Stanisol Naphtha
- Oils
- Lemon Joy (phosphate free)
- Diversol
- Lestoil

ALUZ
1170 North Red Gum Street, Anaheim, CA 92806
Phone: 800 921 2254 or 714 535 7900 | Fax: 714 535 7902 | info@aluz.lighting | aluz.lighting

© ALUZ All rights reserved. ALUZ reserves the right to make changes or withdraw specifications without prior notice.

DIAGRAM OF DRIVER

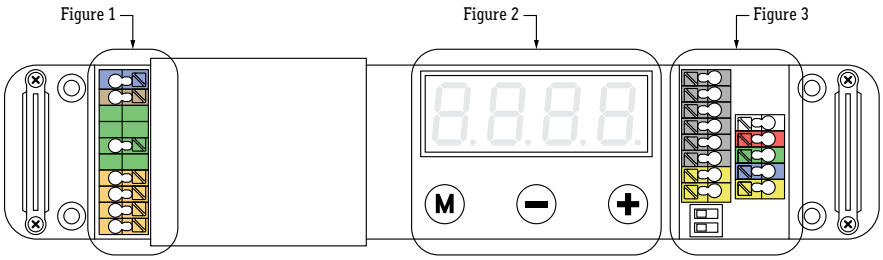

FIGURE 1 (INPUT)

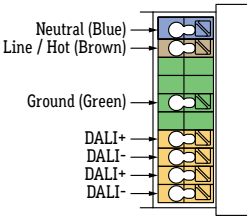

FIGURE 2 (INTERFACE)

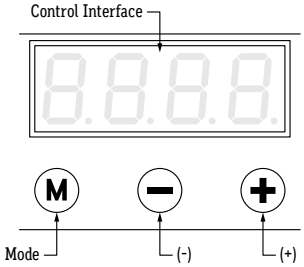

FIGURE 3 (DMX OUTPUT)

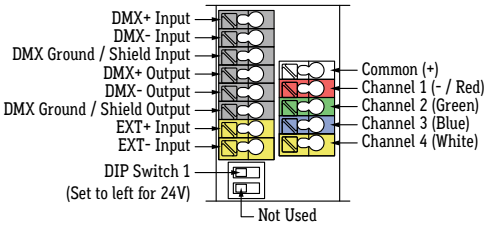

FIGURE 4 (DALI OUTPUT)

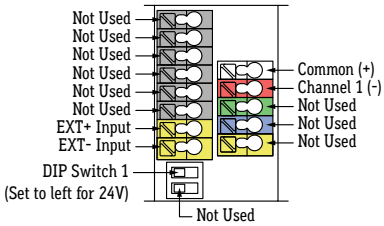

TYPICAL DAISY CHAIN LAYOUT (DMX STATIC COLOR)

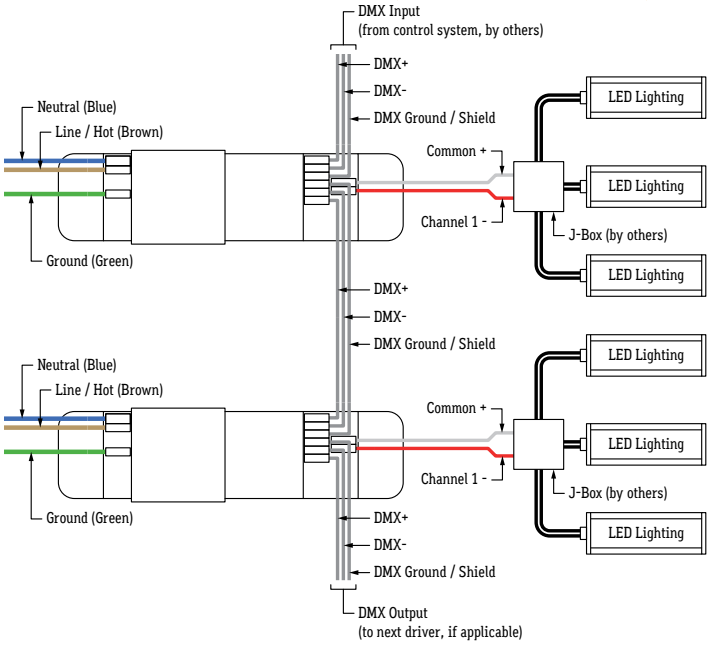

TYPICAL DAISY CHAIN LAYOUT (DALI STATIC COLOR)

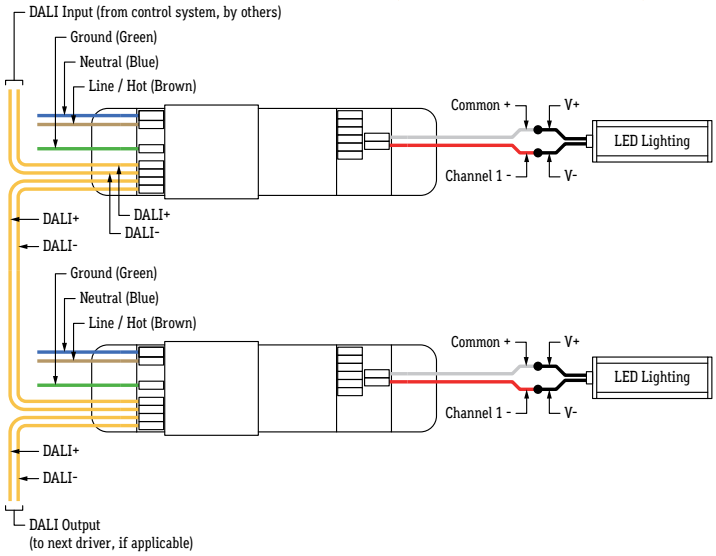

NOTES (DMX)

- Default DMX address of each luminaire is 001. Consult third party DMX commissioner to modify at time of installation. ALUZ does not provide DMX commissioning.
- DMX Address must be set for each driver. Default DMX address for each driver is 001.
- A DMX Control System (by others) must be used to operate the system.
- The last driver in a daisy chain sequence must be terminated.
- Up to 28 drivers may be daisy chained together using shielded cable specified for DMX wiring.
- Wire colors on diagram correspond to colors of driver terminals.
- Driver load not to exceed 96W.
  It is recommended to only load drivers to 80% for best dimming performance.
- Ensure DIP Switch 1 is set to ON (Left) to activate 24V operation.

NOTES (DALI)

- DALI commissioning to be performed by a third party at time of installation. ALUZ does not provide DALI commissioning.
- Wire colors on diagram correspond to colors of driver terminals.
- Driver load not to exceed 100W.
  It is recommended to only load drivers to 80% for best dimming performance.
- A DALI Control System (by others) must be used to operate the drivers.
- Ensure DIP Switch 1 is set to ON (Left) to activate 24V operation.
- DALI Address must be set for each driver.
- Up to 28 drivers may be daisy chained together using shielded cable specified for DALI wiring.

ALUZ
1170 North Red Gum Street, Anaheim, CA 92806
Phone: 800 921 2254 or 714 535 7900 | Fax: 714 535 7902 | info@aluz.lighting | aluz.lighting

© ALUZ All rights reserved. ALUZ reserves the right to make changes or withdraw specifications without prior notice.

MODE OF OPERATION

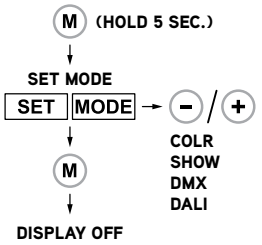

SET LED GROUPS

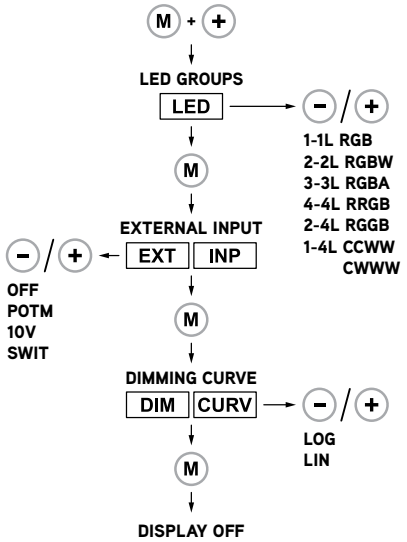

STANDALONE OPERATION (Color / Show)

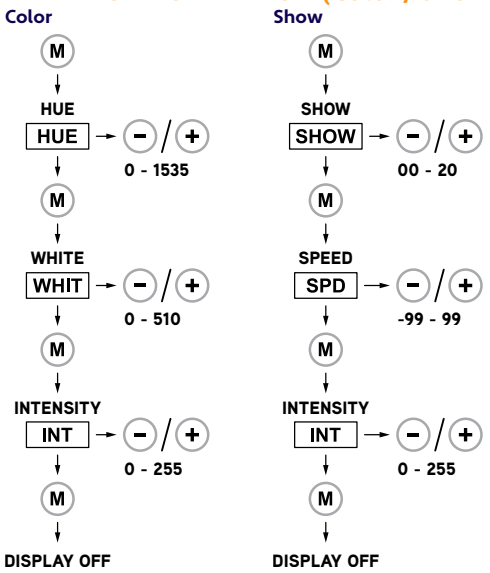

STANDALONE OPERATION (Network Operation)

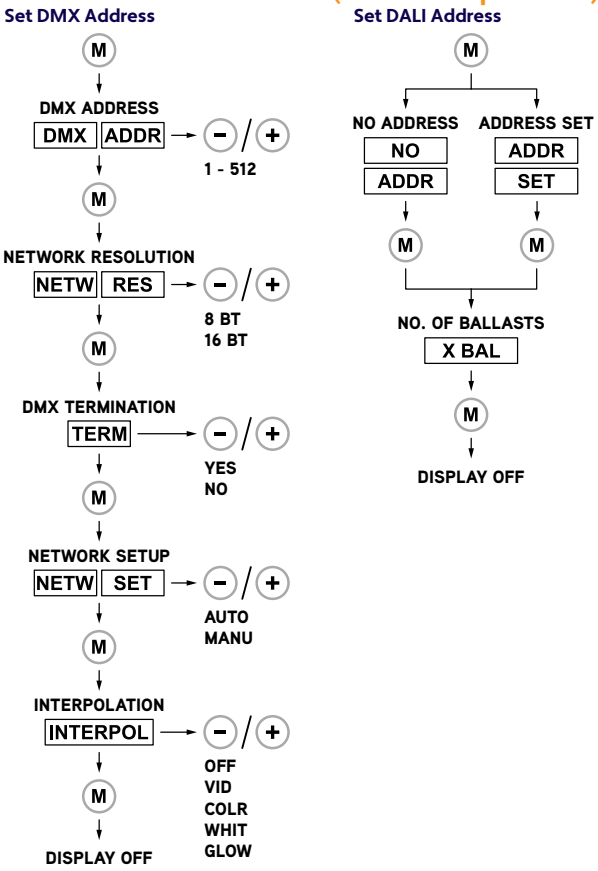

OTHER FUNCTIONS

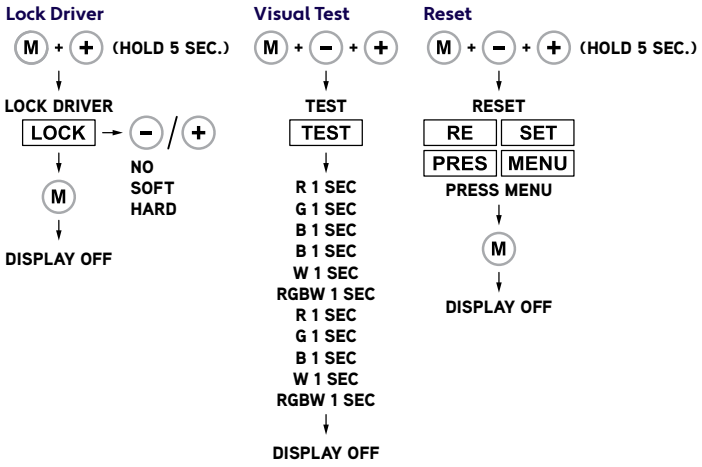

ALUZ
1170 North Red Gum Street, Anaheim, CA 92806
Phone: 800 921 2254 or 714 535 7900 | Fax: 714 535 7902 | info@aluz.lighting | aluz.lighting

© ALUZ All rights reserved. ALUZ reserves the right to make changes or withdraw specifications without prior notice.

APPLICATION GUIDELINES

- Follow the below diagrams and steps if applicable to your installation
- LED lightstrip and modules require a team effort to ensure a secure and correct installation
- Use a wire puller stand to prevent tangles, twists, and snags when installing

LED LIGHTSTRIP

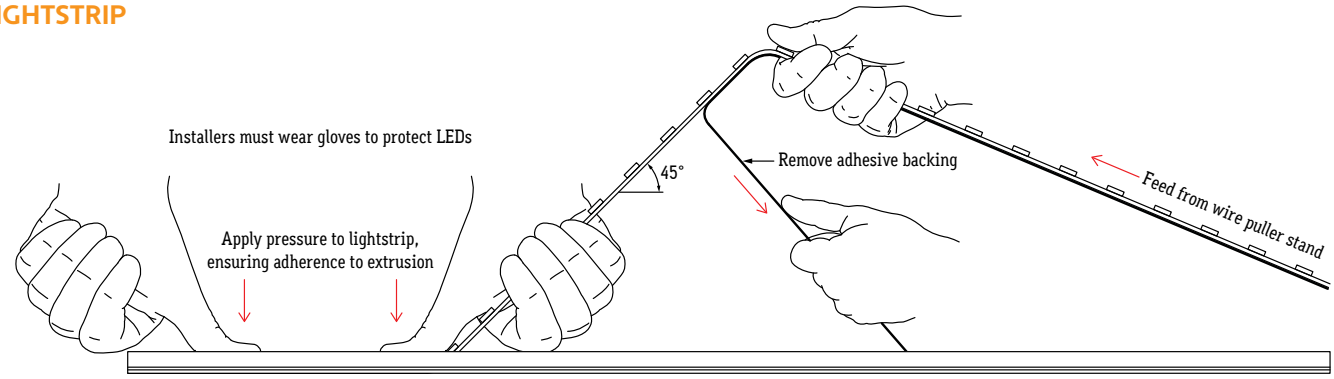

One person applies pressure to lightstrip, securing it to extrusion

Another person unreels lightstrip from spool, holding at a 45° angle.

SOLDERING GUIDE

1 Cut lightstrip to desired length. Include both sets of solder pads by cutting to the left or right of designated markings, allowing more space for a stronger solder connection.

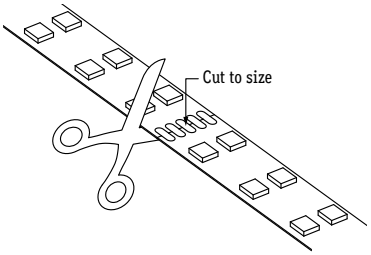

2 Prepare wires by stripping 1/8" from the end of each wire, then tin the tips of the wire with solder. Apply heat to stripped portion of wire, then add a small amount of solder until stripped portion of wire is fully covered in solder.

3 Solder lead wires to solder pads on the end of lightstrip. Solder the black wire to the pad marked 24V+. Solder the green wire to the pad marked G. Solder the red wire to the pad marked R. Solder the blue wire to the pad marked B. Solder the white wire to the pad marked W.
Note: Solder iron to not exceed 720°F. Heat joint with tip of iron. Heat both the solder pad and the wire. Add a small drop of solder on the tip of solder iron to transfer the heat to joint quickly; it should melt and flow smoothly, covering the wire and pad. Remove iron once enough solder has been added to the components. Allow 5 seconds for the joint to cool.

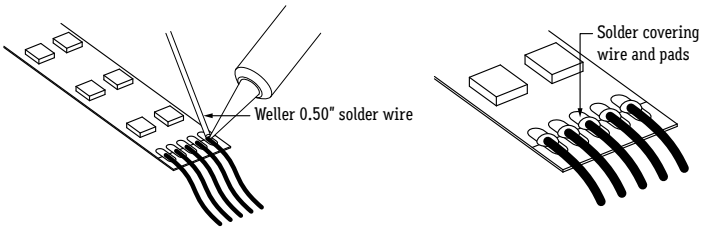

Note: Appearance of lightstrip may differ from example shown. Refer to wiring diagrams before soldering any wires.

ALUZ
1170 North Red Gum Street, Anaheim, CA 92806
Phone: 800 921 2254 or 714 535 7900 | Fax: 714 535 7902 | info@aluz.lighting | aluz.lighting

© ALUZ All rights reserved. ALUZ reserves the right to make changes or withdraw specifications without prior notice.

Mounting Fixture (Dry Location Mounting Channel)

1 Measure area where fixtures will be installed. Use a chalk line to ensure a straight installation.

2 Cut a 1-1/4" x 1-1/4" channel along installation area, using the chalk line as a guide.

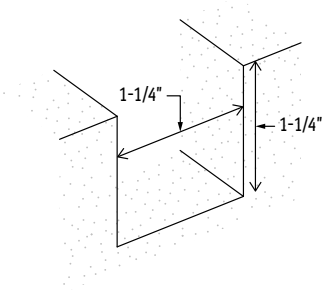

3 Lay extrusions along channel and drill at least 3 countersink holes per extrusion. Drill additional holes as needed.

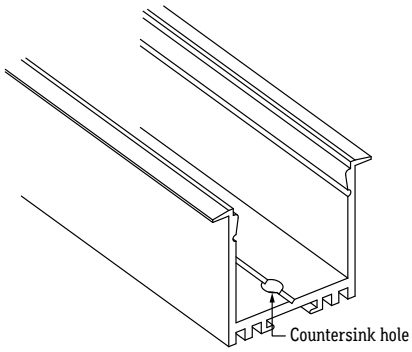

4 Screw extrusions to surface using countersink screws.
Note: Ensure extrusions are aligned. Misalignment will prevent lens from snapping in.

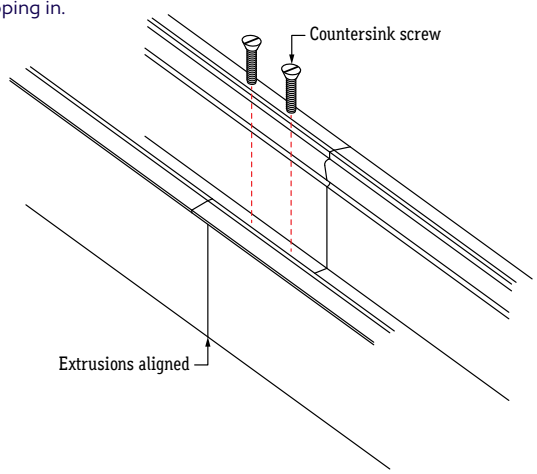

5 After all extrusions have been securely mounted, remove adhesive backing from lightstrip and stick in place along extrusion channel, ensuring lightstrip is secure inside extrusion.
Note: Refer to Application Guidelines to ensure correct installation.

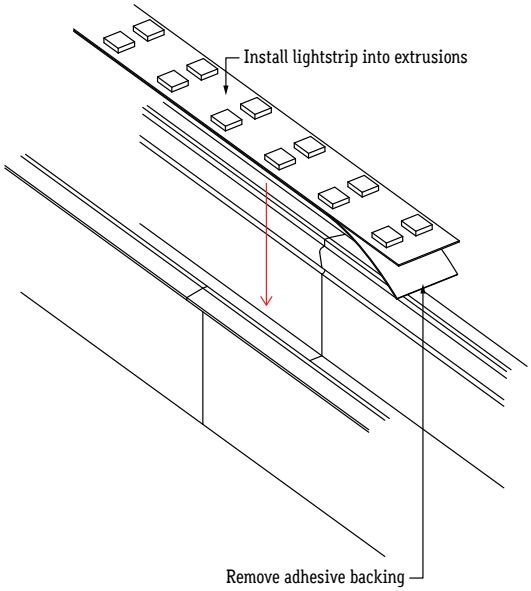

6 If applicable, connect disconnects between fixtures or solder connectors.

7 Install lens into extrusion, overlapping where two extrusions meet. Plan your cuts so that the lens will always overlap where two extrusions meet. Overlapping lenses helps keep extrusions aligned and prevents light leaks.

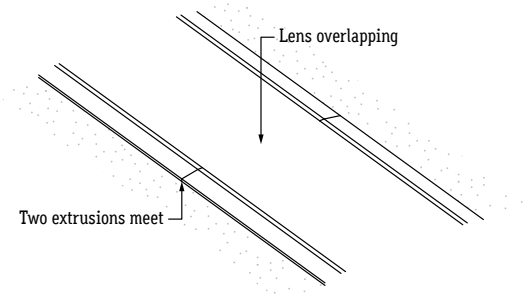

8 Perform a continuity test before connecting fixture to power source.

ALUZ
1170 North Red Gum Street, Anaheim, CA 92806
Phone: 800 921 2254 or 714 535 7900 | Fax: 714 535 7902 | info@aluz.lighting | aluz.lighting

© ALUZ All rights reserved. ALUZ reserves the right to make changes or withdraw specifications without prior notice.