A8 Series | LED Tape
ZIZA Recessed Perimeter
(A8-ZIZA-RCP)

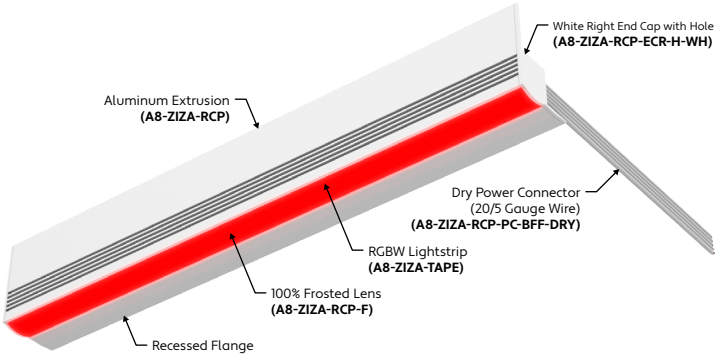

GENERAL FEATURES

Applications	Accent, Decorative, Surface, Recess, Pendant Lighting
Lens	Clear, 50% Semi-Frosted, or 100% Frosted
Viewing Angle	120°
Length	Built to Order (+/- 1/8" Tolerance)
Construction	Aluminum Extrusion
Weight	0.367 lbs per foot
Mounting	Mounting Channel
Listing	Dry, Wet, or IP67 Location UL2108, 67.1.9, 60.4, CSA C22.2 #9 UL8750, CSA250
Driver	Remote (Sold Separately)
Temperature Ratings	Operating / Startup: -20° to 48°C (-4° to 120°F) Storage: -40° to 76°C (-40° to 170°F)
Installation Link	**Link to Installation Instructions >**

ELECTRICAL

Dimming	DMX
Maximum Run **(Class 1 Applications)**	21' **(5.5W)** 26' **(4.5W)**
Maximum Run **(Class 2 Applications)**	15' **(5.5W)** 18' **(4.5W)**
Luminaire Voltage	24VDC

PRODUCT INFORMATION

- For accent, decorative, surface, recessed, or pendant lighting.
- 24 Volts DC for easy and safe installation.
- Long life, energy efficient LEDs.
- Can be ordered to specific lengths for when exact dimensions are known
  Example: 10 x 10'6"
- Plug and light system.
- Lead wires are typically 36" long and exit on one end.

READ ENTIRE GUIDE BEFORE STARTING INSTALLATION

Important Notice: Verify correct luminaire was received with correct color temperature, voltage, and wattage before cutting or installing. ALUZ will not be responsible if incorrect luminaire is installed.

END VIEWS / DIMENSIONS

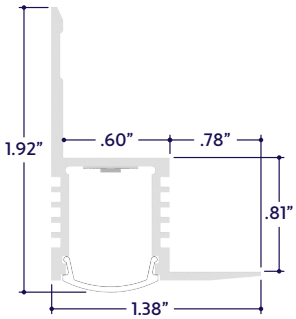

ELECTRICAL REQUIREMENTS

- Luminaires require a 24 Volt DC remote driver.
- To calculate driver size, determine Watts per Foot.
  Example: 4.5W per Foot
- Determine Length in Feet.
  Example: 10'
- Calculate Load: Multiply Watts per Foot x Length in Feet
  Example: 4.5W x 10'= 45W
- Choose a driver from catalog.
  Example: 60 Watt Driver
- Determine maximum driver distance using Maximum Wire Length Table on drivers page.
  Example: 45 watts is between 40W and 60W. Using #14 wire, maximum distance is 37' from driver to first LED.

INSTALLATION RECOMMENDATIONS

- Luminaires must be mechanically attached directly to mounting surface using mounting clips, channels, or other appropriate means.
  Refer to installation step by step pages for details.
- Conduit raceway should be sleeved at one end for low voltage wires going to driver.

INSTALLATION TOOLS REQUIRED

- Electric Hammer Drill
- 14.4 to 28 Volt Cordless Drill
- Phillips Bits
- Utility Knife
- Electrical Cord
- Marker
- Wire Stripper
- Long Nose Pliers
- Drill Bits - Concrete or Wood
- Electrical Three Ways
- Safety Glasses
- Measuring Tape
- Laser Line or Chalk Line

© ALUZ All Rights Reserved. ALUZ reserves the right to make changes or withdraw specifications without prior notice.

WARNING

When using LED Lightstrip for any application, basic safety precautions should always be followed to reduce the risk of fire, electric shock, and personal injury. LED Lightstrip must be installed in accordance with the NEC or CEC as applicable. ALUZ will not be responsible for any damage or malfunction caused by the following:

- Ensure power is off before installation begins, during replacements, additions, or repairs.
- Do not use LED Lighting if damaged, such as broken boards, loose connections, or frayed wire insulation. Inspect before installing.
- Do not install LED Lighting in hazardous locations.
- Do not cover LED Lighting with any material, as it may cause LEDs to overheat, melt, or ignite. **(Fig. 1)**
- Do not paint on or over fixture lens or LEDs. Paint or any other substance on lens or LEDs will cause a shift in color temperature.
- Soffit must be evenly painted with a neutral white to avoid color shift.
- Do not modify LED Lighting in the field.
- Do not overlap LED Lightstrips in any way.
- Only use LED Lighting with specified rated voltages. Do not exceed the specified voltage for any LED Lighting fixture.
- Do not use LED Lighting mounting channel as a raceway for additional wire. Non-factory feed through wires inside LED Lighting will void warranty.
- Ground Fault Circuit Interrupter (GFCI) protections should be provided on circuits or outlets when LED Lighting is used for outdoor applications.
- Surge protector must be set up for electrical power system to avoid damaging LED Lighting system.
- Do not make wiring connections without confirming provided wiring diagrams.
- Do not cut wires while the lighting is energized.
- Do not connect LED Lightstrip to power source while spooled or coiled. **(Fig. 2)**
- Do not connect DC output from remote drivers in parallel. Parallel connections interfere with dimming capabilities and result in feedback that damages drivers. **(Fig. 3)**
- Do not exceed maximum run lengths.
- Always mount channels and mounting clips on flat, even surfaces.
- Do not mount LED Lightstrip with staples, nails, or like means that might damage the insulation. Mount with double-sided tape and mounting clips.
- Do not install mounting clips over LED diodes. **(Fig. 4)**
- Do not penetrate LED Lightstrip with any foreign object. **(Fig. 5)**
- Do not mount LED Lighting inside tanks or enclosures of any kind.
- Do not use improper screw head type on mounting clips. It will cause the mounting clip to open up and become dysfunctional.
- Do not modify mounting clips.
- Do not mount fixture with less than the minimum number of mounting clips required. See mounting clips section for details.
- Do not force LED Lighting into a space that is too small.
- Do not force LED Lighting with cord grip into soffit.
- Do not install LED Lighting fixtures at an angle within a cove. Only install fixtures straight within a cove.
- Do not bend mounting channel around radius.
- Do not submerge dry or wet location LED Lighting in any liquid.
- Do not install wet location in outdoor coves without proper drainage. **(Fig. 6)**
- Do not install LED Lighting in any area that is continuously exposed to flowing or pooling water, such as underneath drain pipes, sprinklers, fountains, misters, etc.
- Do not install connectors without shrink tube for wet location. **(Fig. 7)**
- Do nut use a lighter or open flame to heat shrink tube. **(Fig. 8)**
- Do not cut, puncture, or penetrate the lighting's aluminum housing, end caps, or lens covers.
- Do not drop, bang, or rest weight upon lighting.
- Do not apply excessive pressure to any part of LED Lighting or LEDs. **(Fig. 9)**
- Do not bend LED Lighting power cord or continuous connector past permitted bend radius. Bending past permitted bend radius will break the seal of the cordgrip or damage the insulation. 1.5" minimum bend radius. **(Fig. 10)**
- Do not bend lightstrip past permitted bend radius. Bending past permitted bend radius will break the seal of the cordgrip or damage the insulation. 1.5" minimum bend radius.
- Do not install LED Lightstrip in a zig zag fashion. **(Fig. 11)**
- Do not fold, crease, or twist LED Lightstrip. **(Fig. 12)**
- Do not bend LED Lightstrip along a horizontal plane. **(Fig. 13)**
- Do not overlap LED Lightstrip at any location. **(Fig. 14)**
- Do not cross or overlap mounting channels and twist lightstrip to overlap. **(Fig. 15)**
- Do not install LED Lighting in places where the power cord is subject to continuous flexing.
- Do not twist continuous connector, power cord, or any other wiring.
- Do not hold, carry, or suspend LED Lighting by the power cord.
- Do not install LED Lighting on ceilings without mounting clips. **(Fig. 16)**

FIGURES

Fig. 1

Fig. 2

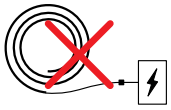

Fig. 3

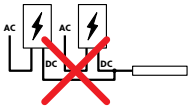

Fig. 4

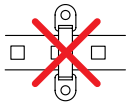

Fig. 5

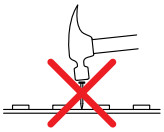

Fig. 6

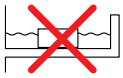

Fig. 7

Fig. 8

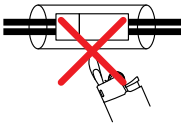

Fig. 9

Fig. 10

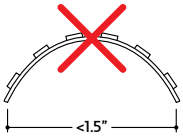

Fig. 11

Fig. 12

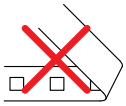

Fig. 13

Fig. 14

Fig. 15

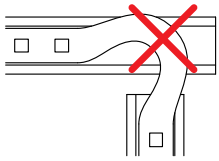

Fig. 16

CLEANING MATERIALS

The use of solvents and/or cleaners which are not compatible with polycarbonate will result in the softening, crazing, and/or cracking of the plastic part. This is especially true of polycarbonate lamps and mounting bases which may be under stress in their normal applications.

COMPATIBLE WITH POLYCARBONATE

- Mild soap and water
- Mineral Spirits
- Isobutyl Alcohol
- VM and P Naphtha
- Varsol No.2
- Mexane
- Freone TF and TE-35
- Ethanol
- Dirtex
- 2% Sol. Reg. Joy
- 10% Sol Bon Ami
- White Kerosene
- Methyl Alcohol
- Heptane
- Petroleum Ether / 65°C
- Isopropyl Alcohol
- Lacryl PCL-2035 Polycarbonate Cleaner

NOT COMPATIBLE WITH POLYCARBONATE

- Trichlor
- Gasoline
- Liquid Detergents
- Acetone
- Carbon Tetrachloride
- Pink Lux (Phosphate free)
- Triclene
- Chlorinated Hydrocarbons
- #1 & #3 Denatured Alcohol
- Methyl Ethyl Keytone (MEK)
- Texize-8006, 8129, 8758
- MIBK
- Liquid Cleaner – 8211
- Toluol
- Agitene
- Benzol
- Ajax
- Kleenol Plastics
- Lysol
- Stanisol Naphtha
- Oils
- Lemon Joy (phosphate free)
- Diversol
- Lestoil

© ALUZ All Rights Reserved. ALUZ reserves the right to make changes or withdraw specifications without prior notice.

DIAGRAM OF DRIVER

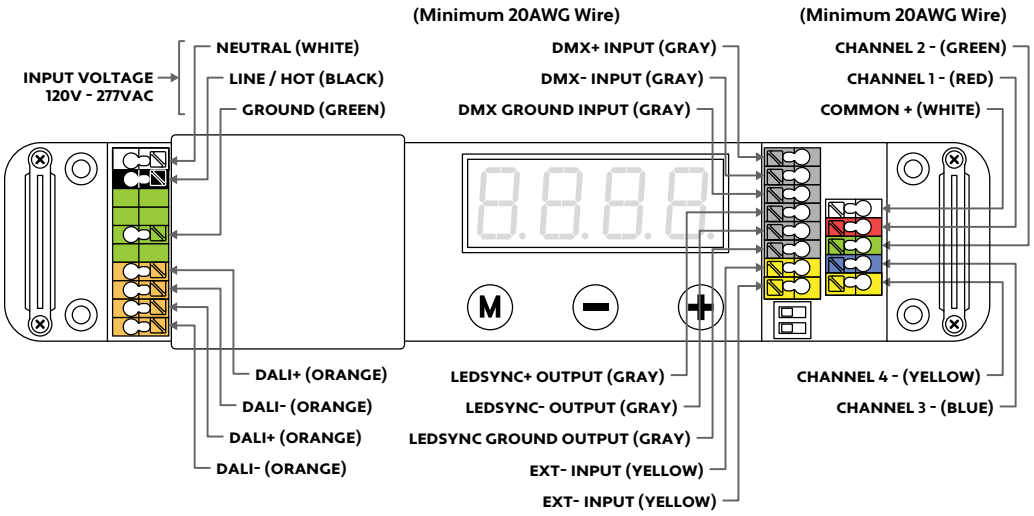

DIGITAL INTERFACE

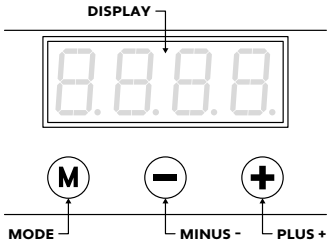

NOTES (DMX)

- Wire colors on diagram correspond to colors of driver terminals.
- Default DMX address of each luminaire is 001. Consult a third party DMX commissioner to modify at time of installation. ALUZ does not provide DMX commissioning.
- DMX Address must be set for each driver. Default DMX address is 001.
- A DMX Control System (by others) must be used to operate the lighting.
- The last driver in a daisy chain sequence must be terminated.
- Driver load not to exceed 100W.
- For best dimming performance, it is recommended to load drivers to a minimum of 50% (50W) and a maximum of 80% (80W).
- Up to 28 drivers may be daisy chained together using shielded cable specified for DMX wiring.
- Ensure DIP Switch 1 is set to ON (Left) to activate 24V operation.

DMX Wiring: RGBW

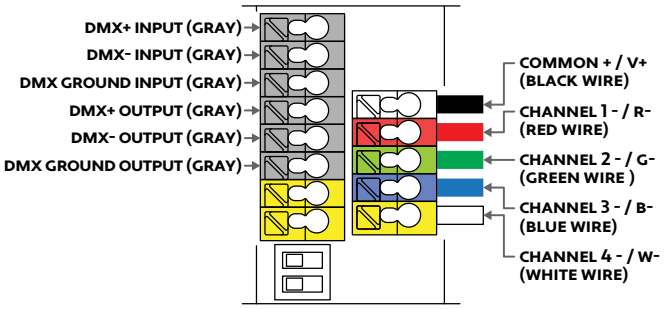

DMX Daisy Chain

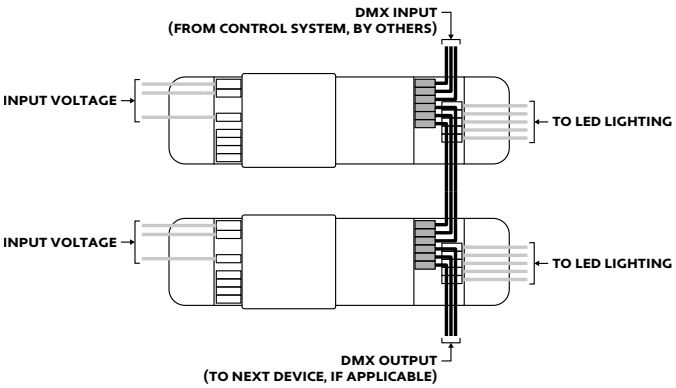

NOTES (DALI)

- Wire colors on diagram correspond to colors of driver terminals.
- DALI commissioning to be performed by a third party at time of installation. ALUZ does not provide DALI commissioning.
- DALI Address must be set for each driver.
- A DALI Control System (by others) must be used to operate the lighting.
- Driver load not to exceed 100W.
- For best dimming performance, it is recommended to load drivers to a minimum of 50% (50W) and a maximum of 80% (80W).
- Up to 28 drivers may be daisy chained together using shielded cable specifi ed for DALI wiring.
- Ensure DIP Switch 1 is set to ON (Left) to activate 24V operation.

DALI Daisy Chain

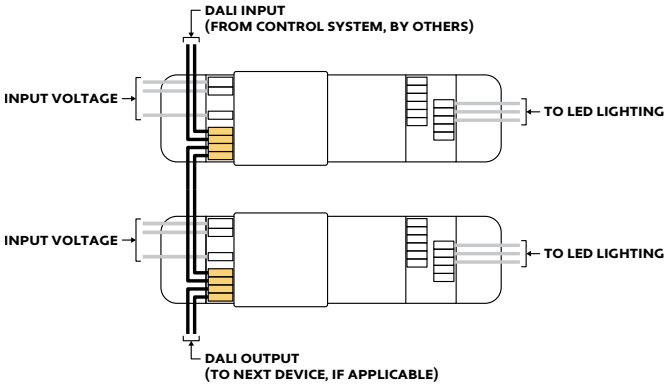

© ALUZ All Rights Reserved. ALUZ reserves the right to make changes or withdraw specifications without prior notice.

MODE OF OPERATION

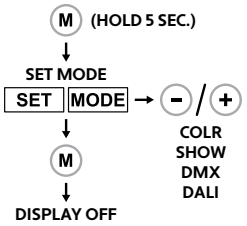

- Set Mode to DMX or DALI

SET LED GROUPS

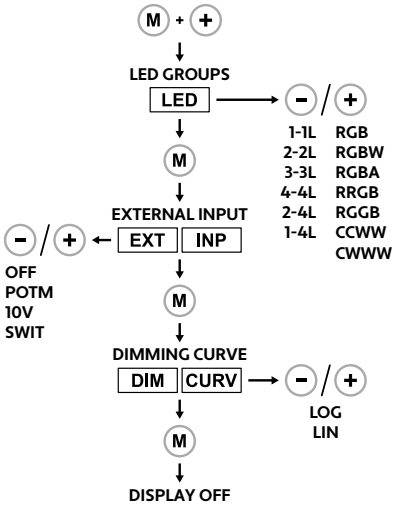

- Set LED Groups to RGBW for RGBW lighting.
- Set LED Groups to CCWW for Dynamic White lighting.
- Set LED Groups to 2-2L for Static White lighting.
- Set External Input to OFF.
- Set Dimming Curve to Linear.

STANDALONE OPERATION (Color / Show)

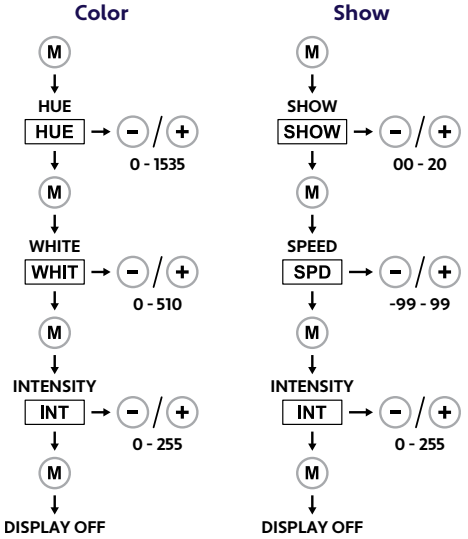

- Standalone Operation should only be used when a control system is not present to control the lighting (not recommended).

MODE OF OPERATION

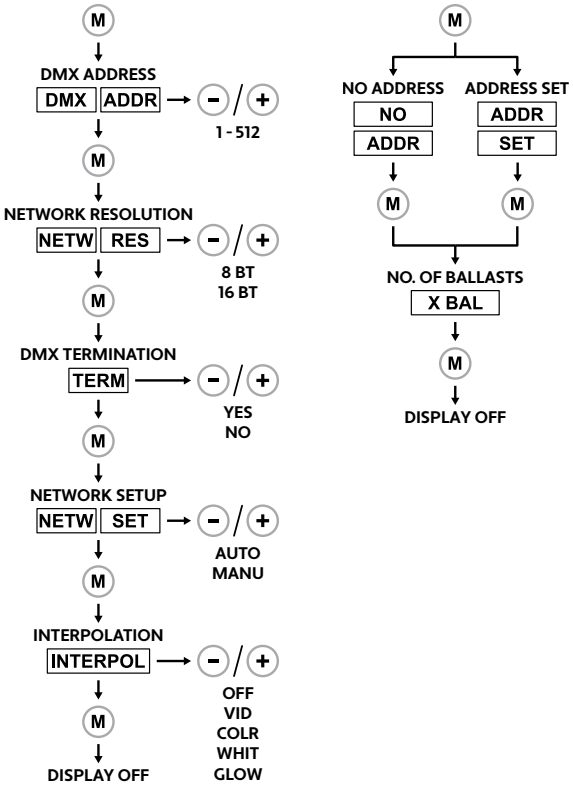

- Consult with a third-party DMX or DALI professional to determine which settings are best for your application. ALUZ does not provide DMX or DALI commissioning.

OTHER FUNCTIONS

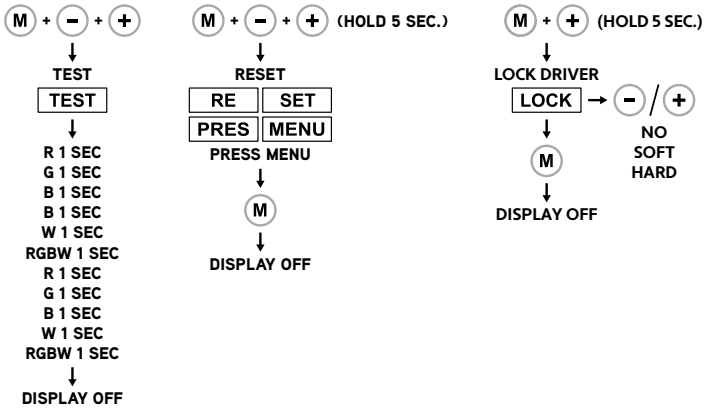

- Always perform the visual test function after wiring to ensure all channels are behaving appropriately.
- Reset driver to factory settings if necessary. It is recommended to reset each driver before adjusting settings for the first time.
- Lock driver if applicable (not recommended).

© ALUZ All Rights Reserved. ALUZ reserves the right to make changes or withdraw specifications without prior notice.

APPLICATION GUIDELINES

- Follow the below diagrams and steps if applicable to your installation.
- LED lightstrip and modules require a team effort to ensure a secure and correct installation.
- Use a wire puller stand to prevent tangles, twists, and snags.
- For Mud-In applications, start lightstrip from power source side and allow up to 2" of excess lightstrip to exit through end cap.

NOTE

- Extrusions are shipped to exact length of specified measurements.
- Due to cut increment restrictions (4",+/- 0.125" Tolerance), the lightstrip is shipped to the closest measurement ordered. The lightstrip must be centered in the extrusion.
- Remove adhesive backing completely to allow heat transfer tape to make contact with the aluminum extrusion.
- Improper field cutting or soldering of lightstrip will void warranty. The below steps must be followed and performed properly to retain warranty. Field cutting & soldering is only applicable to Dry, Damp, and Wet Locations. IP67 rated products are not field cuttable.

LED LIGHTSTRIP

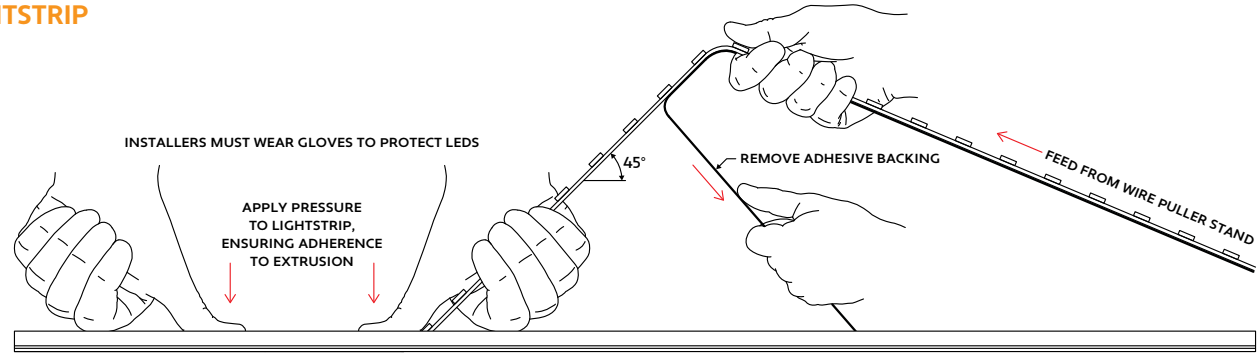

ONE PERSON APPLIES PRESSURE TO LIGHTSTRIP, SECURING IT TO EXTRUSION

ANOTHER PERSON UNREELS LIGHTSTRIP FROM SPOOL, HOLDING AT A 45° ANGLE.

SOLDERING GUIDE

Note: Appearance of lightstrip may differ from example shown. Refer to wiring diagrams before soldering any wires.

1 Cut lightstrip to desired length. Include both sets of solder pads by cutting to the left or right of designated markings, allowing more space for soldering.

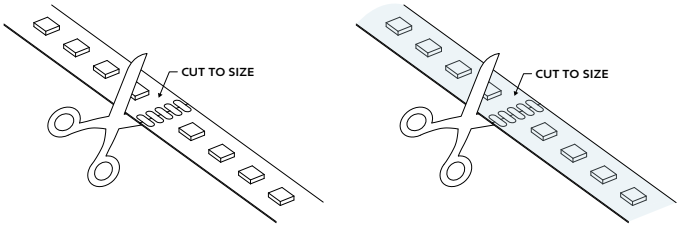

2 Prepare wires by stripping 1/8" from the end of each wire, then tin the tips of the wire with solder. Apply heat to stripped portion of wire, then add a small amount of solder until stripped portion of wire is fully covered in solder.

3 If applicable, use a mat knife to remove encapsulation from the section of lightstrip with solder pads. If lightstrip is not encapsulated, skip this step.

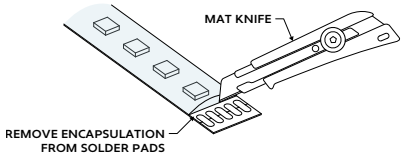

4 Solder lead wires to solder pads on the end of lightstrip.
- Solder the Black wire to the pad marked "+24V".
- Solder the Green wire to the pad marked "G".
- Solder the Red wire to the pad marked "R".
- Solder the Blue wire to the pad marked "B".
- Solder the White wire to the pad marked "W".

Note: Solder iron not to exceed 720°F. Heat joint with tip of iron. Heat both the solder pad and the wire. Add a small drop of solder on the tip of solder iron to transfer the heat to joint quickly; it should melt and flow smoothly, covering the wire and pad. Remove iron once enough solder has been added to the components. Allow 5 seconds for the joint to cool.

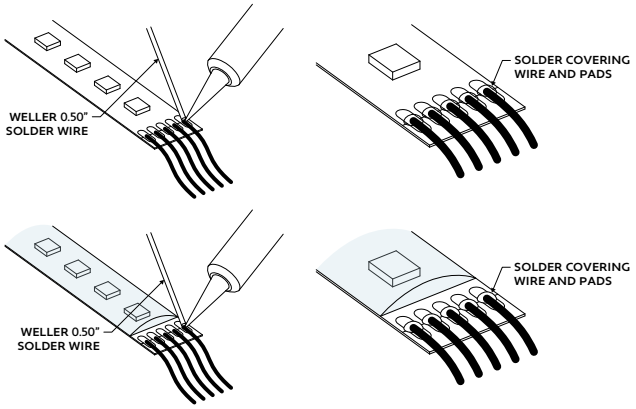

5 If applicable, apply silicone over soldered connections. All connections must be completely covered with silicone to create weatherproof seal. Only use outdoor rated silicone. If lightstrip is not encapsulated, skip this step.

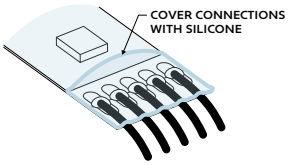

© ALUZ All Rights Reserved. ALUZ reserves the right to make changes or withdraw specifications without prior notice.

EXAMPLE: 90° MITER

Miter cuts are only to be performed on unassembled dry location products. Do not attempt to modify wet location products.

1 Measure area where mitered segments will be installed.
Cut extrusion and lens to size +1".
Example: 7'8" extrusion to meet 1'5" extrusion. Cut extrusions to 7'9" and 1'6"
Note: Plan your cuts so that lens will always overlap where two extrusions meet. Overlapping lenses helps keep extrusions in line and prevents light leaks.

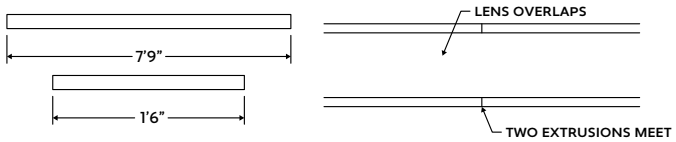

2 Measure angle where fixture will be mitered. Use an angle finder to determine exact angle.
Example: 90° Angle

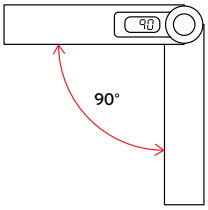

3 Divide measured angle by 2 (90° ÷ 2 = 45°). Set miter saw to 45° and cut the end of each extrusion and lens where they will intersect. Verify the miter closes properly and fits in area, then trim excess extrusion on the end without the miter to exact size.

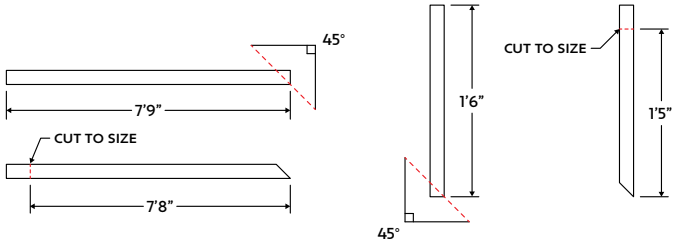

4 Use a small segment of wire to solder lightstrips between mitered extrusions. Do not bend lightstrip to turn corner. Refer to application guidelines for soldering steps.

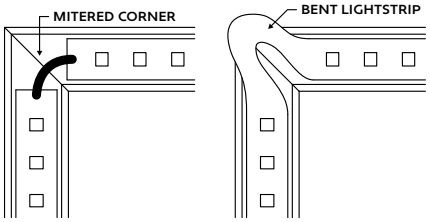

CORRECT
Solder 1" wires

INCORRECT
Do not bend lightstrip around corners

EXAMPLE: 135° MITER

1 Measure area where mitered segments will be installed.
Cut extrusion and lens to size +1".
Example: 7'8" extrusion to meet 1'5" extrusion. Cut extrusions to 7'9" and 1'6"
Note: Plan your cuts so that lens will always overlap where two extrusions meet. Overlapping lenses helps keep extrusions in line and prevents light leaks.

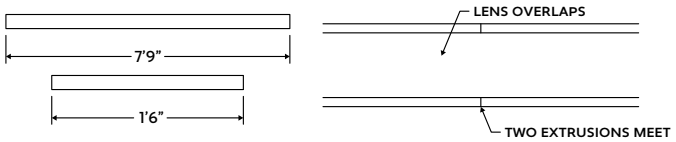

2 Measure angle where fixture will be mitered. Use an angle finder to determine exact angle.
Example: 135° Angle

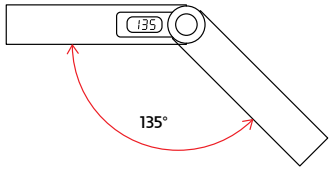

3 Divide measured angle by 2 (135° ÷ 2 = 67.5°). Set miter saw to 67.5° and cut the end of each extrusion and lens where they will intersect. Verify the miter closes properly and fits in area, then trim excess extrusion on the end without the miter to exact size.

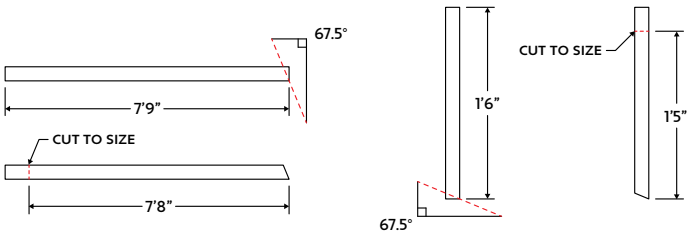

4 Use a small segment of wire to solder lightstrips between mitered extrusions. Do not bend lightstrip to turn corner. Refer to application guidelines for soldering steps.

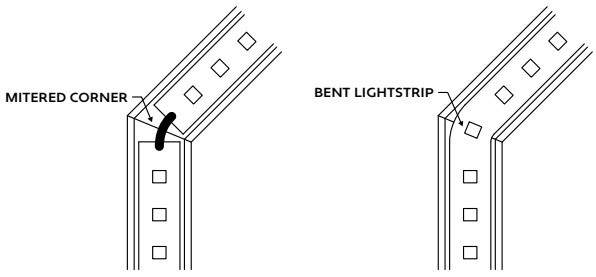

CORRECT
Solder 1" wires

INCORRECT
Do not bend lightstrip around corners

© ALUZ All Rights Reserved. ALUZ reserves the right to make changes or withdraw specifications without prior notice.

1 Determine installation application. Fixtures must be mounted prior to installation of dropped ceiling or toe kick.

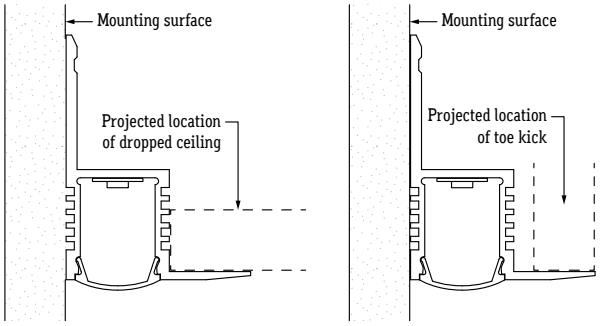

2 Measure area where luminaire will be installed. Use a laser line to create a reference line along installation area, ensuring consistent alignment of mounting channels.

3 Position extrusions along mounting surface and drill at least 3 countersink holes per extrusion. Drill additional holes as needed.

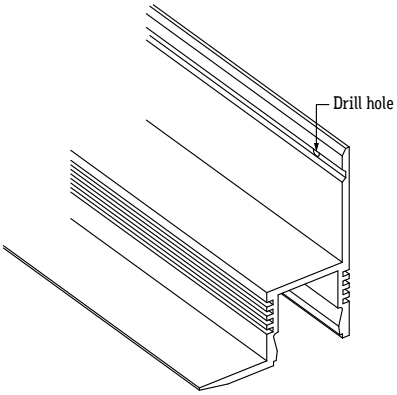

4 Screw extrusions to mounting surface using countersink screws.
Note: Ensure extrusions are aligned. Misalignment will prevent lens from snapping in.

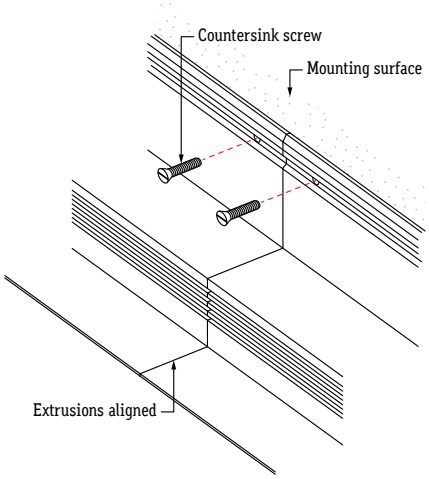

5 After all extrusions have been securely mounted, remove adhesive backing from lightstrip and stick in place along extrusion channel, ensuring lightstrip is secure inside extrusion.
Note: Refer to Application Guidelines to ensure correct installation.

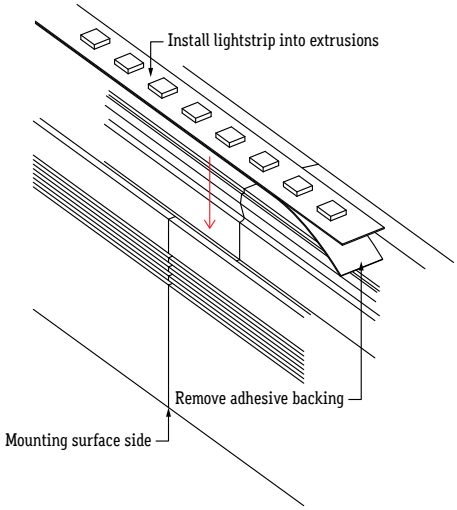

6 If applicable, connect disconnects between fixtures or solder connectors using the steps from Application Guidelines.

7 Install lens into extrusion, overlapping where two extrusions meet. Plan your cuts so that the lens will always overlap where two extrusions meet. Overlapping lenses helps keep extrusions aligned and prevents light leaks.

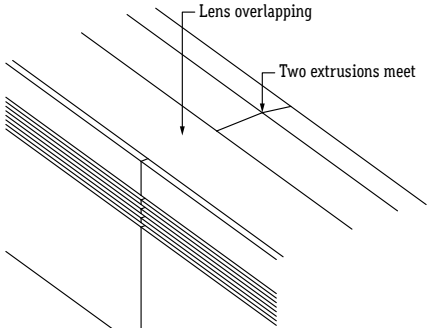

8 Perform a continuity test before connecting fixture to power source.

9 Install drywall or other material to create toe kick or dropped ceiling.

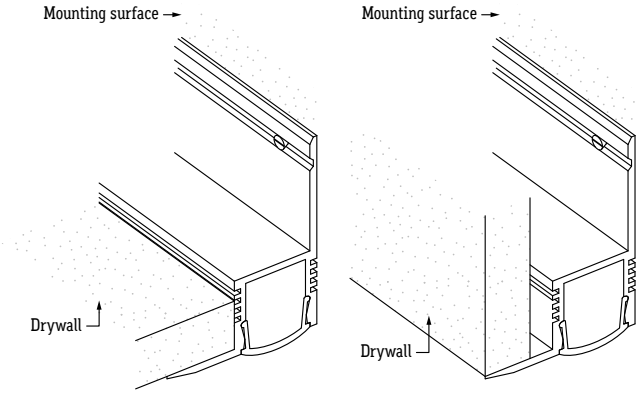

© ALUZ All Rights Reserved. ALUZ reserves the right to make changes or withdraw specifications without prior notice.

1 Determine installation application. Fixtures must be mounted prior to installation of dropped ceiling or toe kick.

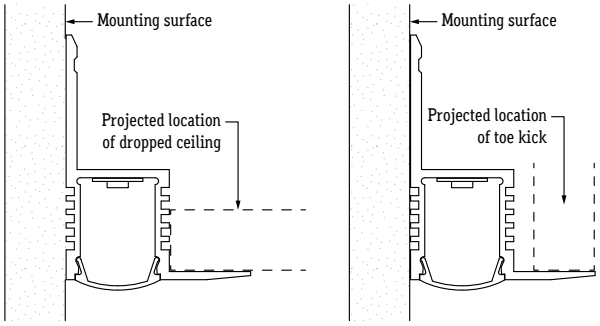

2 Measure area where luminaire will be installed. Use a laser line to create a reference line along installation area, ensuring consistent alignment of mounting channels.

3 Position extrusions along mounting surface and drill at least 3 countersink holes per extrusion. Drill additional holes as needed.

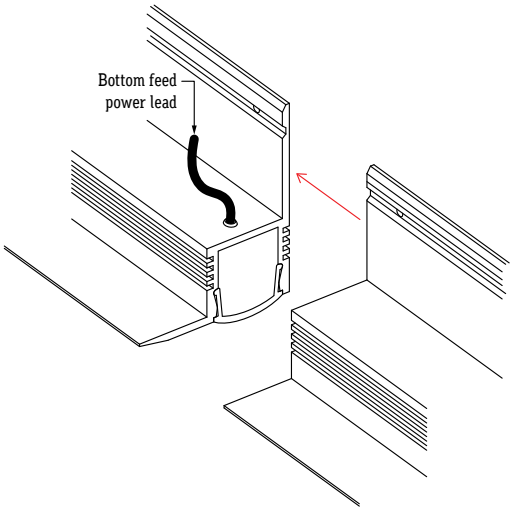

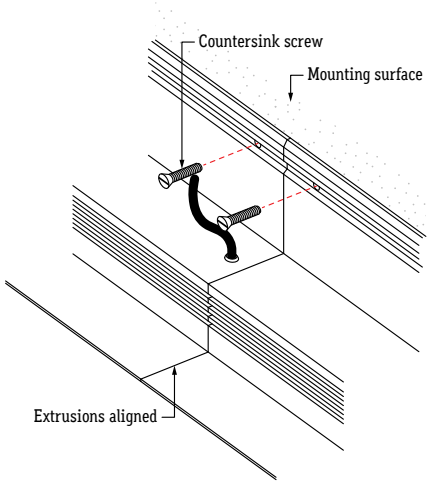

4 If applicable, connect disconnects between luminaires or solder connectors using the steps from Application Guidelines.

5 Perform a continuity test before connecting fixture to power source.

6 Install drywall or other material to create toe kick or dropped ceiling.

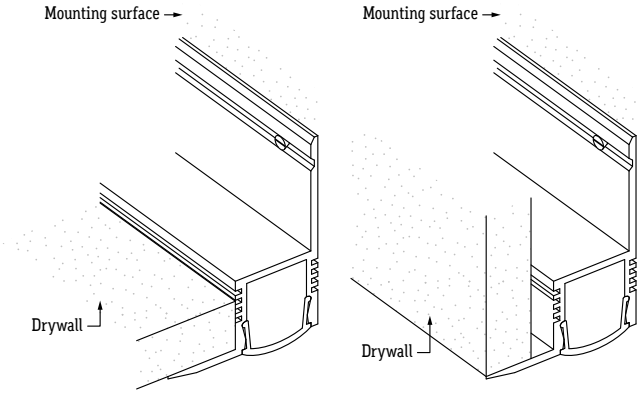

© ALUZ All Rights Reserved. ALUZ reserves the right to make changes or withdraw specifications without prior notice.

A8 Series | LED Tape
ZIZA Recessed Perimeter
(A8-ZIZA-RCP)

Mounting Fixture (Wet Location Unassembled Mounting Channel)

1 Determine installation application. Fixtures must be mounted prior to installation of dropped ceiling or toe kick.

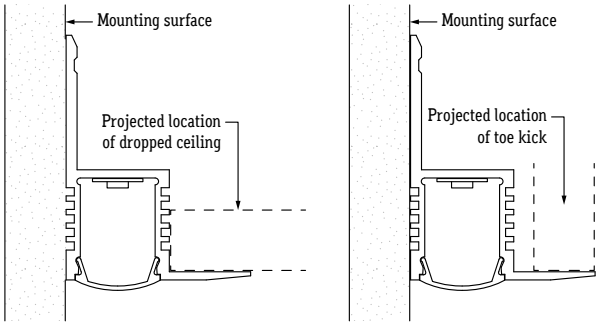

2 Measure area where luminaire will be installed. Use a laser line to create a reference line along installation area, ensuring consistent alignment of mounting channels.

3 Position extrusions along mounting surface and drill at least 3 countersink holes per extrusion. Drill additional holes as needed.

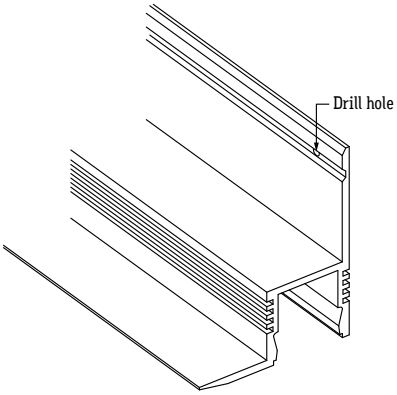

4 Screw extrusions to mounting surface using countersink screws.
Note: Ensure extrusions are aligned. Misalignment will prevent lens from snapping in.

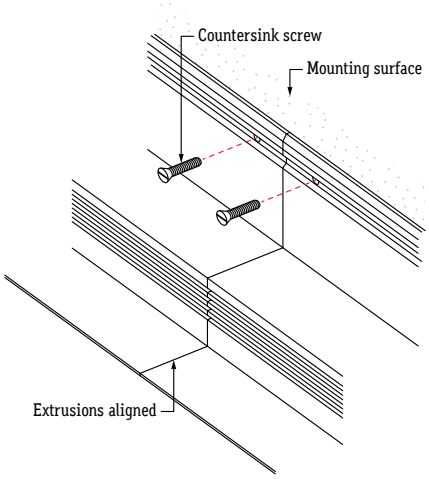

5 After all extrusions have been securely mounted, remove adhesive backing from lightstrip and stick in place along extrusion channel, ensuring lightstrip is secure inside extrusion.
Note: Refer to Application Guidelines to ensure correct installation.

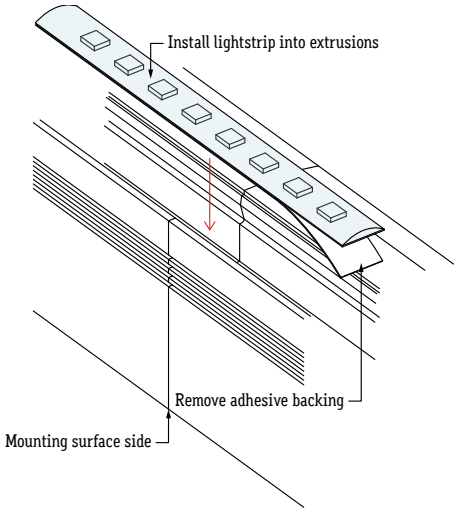

6 If applicable, connect disconnects between fixtures or solder connectors using the steps from Application Guidelines.

7 Install lens into extrusion, overlapping where two extrusions meet. Plan your cuts so that the lens will always overlap where two extrusions meet. Overlapping lenses helps keep extrusions aligned and prevents light leaks.

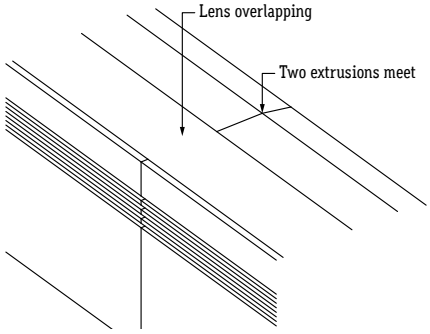

8 Perform a continuity test before connecting fixture to power source.

9 Install drywall or other material to create toe kick or dropped ceiling.

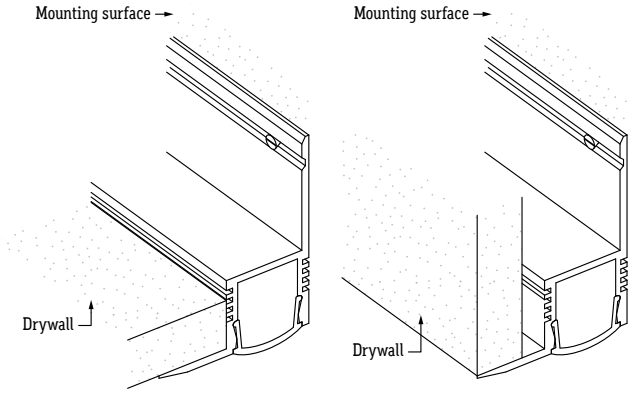

620 South Richfield Rd, Placentia, CA 92870
aluz.lighting info@aluz.lighting 866.ALUZ.LTG | 714.535.7900

© ALUZ All Rights Reserved. ALUZ reserves the right to make changes or withdraw specifications without prior notice.

CONTINUITY TEST

A continuity test is performed to determine if electricity can pass through two points on an electrical circuit. This helps identify shorts or malfunctions in the line or luminaire. Use a multimeter or continuity tester to perform the steps below.

- Always perform a continuity test before connecting to power source.
- Malfunctions are not always as obvious as the lights not turning on.
- A short or malfunction in the line or luminaire will cause damage over time, irreparably damaging the lighting and voiding warranty.

EXAMPLE OF MULTIMETER (BY OTHERS)

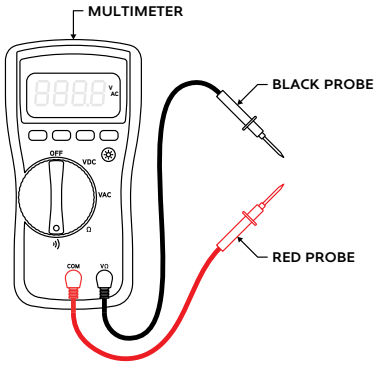

1 Turn off power before beginning. Verify power is off by using a non-contact circuit tester (by others). Touch the probe of the tester to the positive wire of the power source. The tester will light up if an electrical current is detected.

2 Setup your multimeter tester (by others). First, insert the black probe lead into the COM jack, then insert the red probe lead into the VΩ jack.

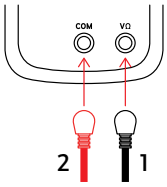

3 Verify multimeter is functional by touching probes together. The multimeter should beep, flash, or read 0Ω (ohms) of resistance.

4 Touch the red probe to the black wire and the black probe to each colored wire. If a conductive path is formed between the black wire and any other wire, the multimeter will beep, flash, or read 0Ω (ohms). Troubleshoot to identify the malfunction in the line. If there is no conductive path, the multimeter will not show any feedback.

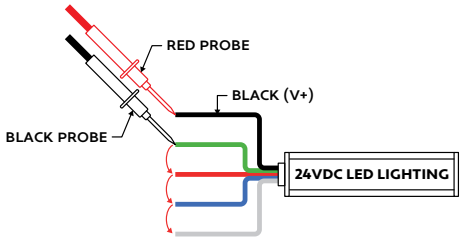

5 Touch the red probe to the fixture extrusion and the black probe to the black wire. If a conductive path is formed between the extrusion and the black wire, the multimeter will beep, flash, or read 0Ω (ohms). Troubleshoot to identify the malfunction in the line. If there is no conductive path, the multimeter will not show any feedback.

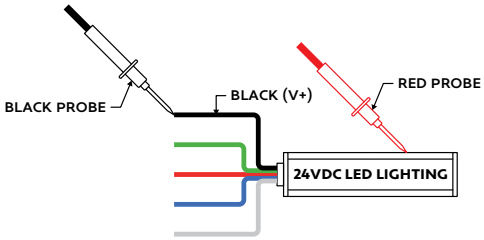

6 Touch the red probe to the fixture extrusion and the black probe to the each colored wire. If a conductive path is formed between the extrusion and any colored wire, the multimeter will beep, flash, or read 0Ω (ohms). Troubleshoot to identify the malfunction in the line. If there is no conductive path, the multimeter will not show any feedback.

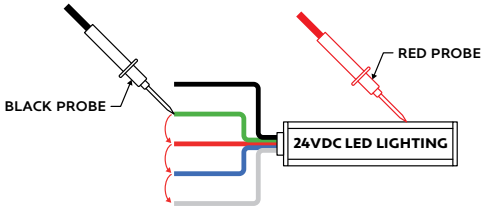

7 Set multimeter to DC voltage and test power source. Confirm the correct voltage before connecting luminaire to power source. If the voltage reading is more than 1 volt greater than the marked output voltage, there is a problem with the power source or driver.

8 Connect luminaire to power source via power connector. If LEDs do not turn on, there is an issue with the wiring. Troubleshoot to identify the problem.

© ALUZ All Rights Reserved. ALUZ reserves the right to make changes or withdraw specifications without prior notice.

A8 Series | LED Tape
ZIZA Recessed Perimeter
(A8-ZIZA-RCP)

Surge Protector

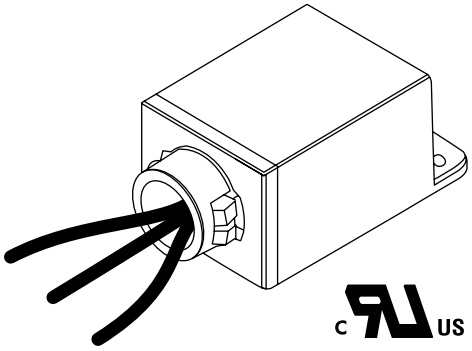

CASE DIMENSIONS

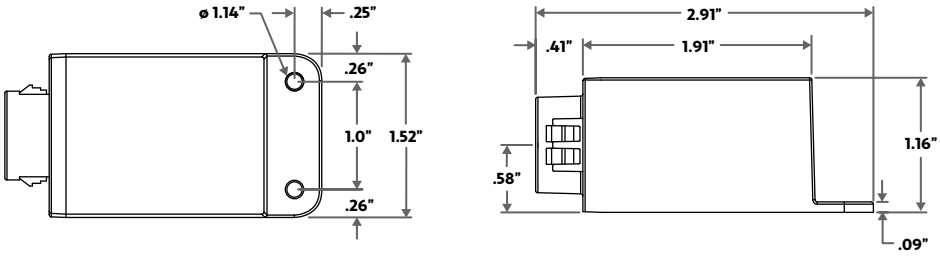

SURGE PROTECTOR SPECIFICATIONS

Model	Input Voltage	Surge Protection Level	Mounting	Enclosure Material	Input Needs	Input Frequency
ALS-SP	120V - 277V	0kV, 10kA, ANSI C62.41 Category C	SnapLOCK / Footed	Polycarbonate	6", 18AWG stranded, 105°C stripped, 3/8" tinned	60Hz

PRODUCT FEATURES

The Surge Series are 3-leaded devices that protect Line-Ground, Line-Neutral, and Neutral-Ground in accordance with IEEE / ANSI C62.41.2 guidelines. Protects against surges according to IE EE C62.41.2 C High (10kA and 10kV). Surge current rating = 10,000 Amps using industry standard 8/20 Sec wave. Surge Location Rated Category C3. UL Recognized Component in the United States and Canada (UL1449). Type 4 Surge Protection Device. High temperature, flame retardant plastic enclosure, 85°C maximum surface temperature rating. Thermally Protected Transient Over-voltage Circuit.

PRODUCT SPECIFICATIONS

The Surge series of products are designed to be used in conjunction with LED Drivers and fixtures to provide an additional level of protection against powerline disturbances in industrial, commercial and residential applications where surge protection to IEEE C62.41.2 is required.

DMX DIMMING WITH DECODER WIRING DIAGRAM

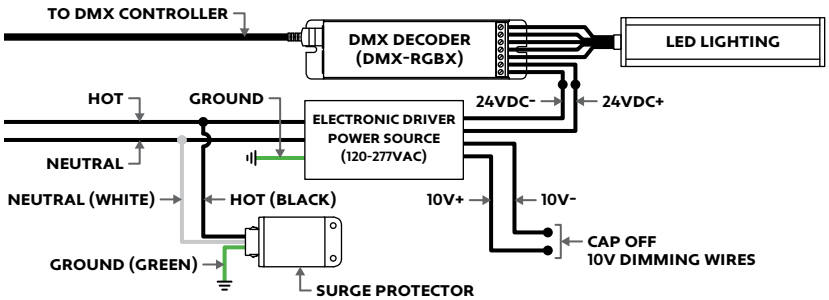

DMX DIMMING WITH ALL-IN-ONE DRIVER WIRING DIAGRAM

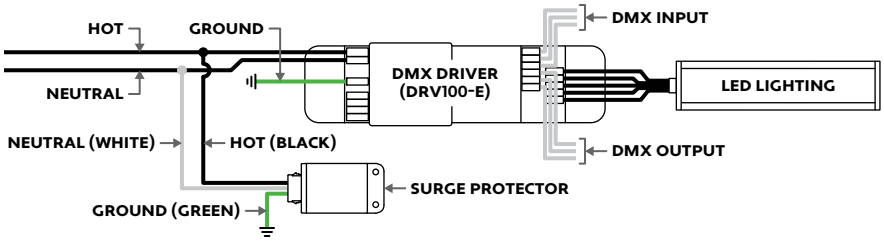

620 South Richfield Rd, Placentia, CA 92870

aluz.lighting info@aluz.lighting 866.ALUZ.LTG | 714.535.7900

© ALUZ All Rights Reserved. ALUZ reserves the right to make changes or withdraw specifications without prior notice.