A8 Series | LED Tape
ZIGY Standard Square
(A8-ZIGY-STQ)

Overview

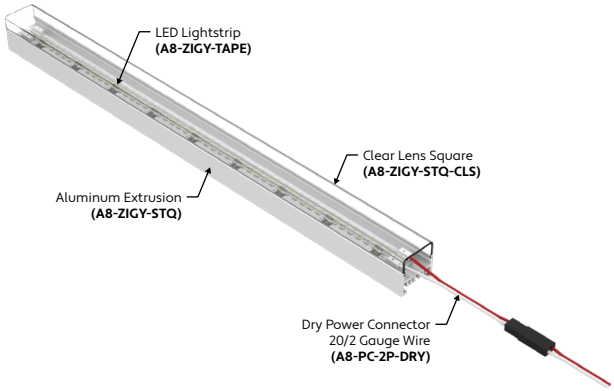

GENERAL FEATURES

Applications	Accent, Decorative, Surface, Recessed, Pendant Lighting
Lens	Clear, 50% Semi-Frosted, or 100% Frosted
Viewing Angle	120°
Length	Built to Order (+/- 1/8" Tolerance)
Construction	Aluminum Extrusion
Weight	0.195 lbs per foot
Mounting	Mounting Channel or Mounting Clips (Sold Separately)
Listing	Dry, Wet, or IP67 Location UL2108, 67.1.9, 60.4, CSA C22.2 #9 UL8750, CSA250
Driver	Remote (Sold Separately)
Closet Rating	Up to 3.6 Watts per Foot Maximum
Temperature Ratings	Operating / Startup: -20° to 48°C (-4° to 120°F) Storage: -40° to 76°C (-40° to 170°F)
Installation Link	**Link to Installation Instructions >**

ELECTRICAL

Dimming	0-10V, Forward / Reverse Phase, Lutron, DMX, DALI
Maximum Run (Class 1 Applications)	18' **(6.5W)**, 21' **(5.5W)**, 26' **(4.5W)**, 33' **(3.6W)**, 36' **(1.5W, 2.5W)**
Maximum Run (Class 2 Applications)	13' **(6.5W)**, 15' **(5.5W)**, 18' **(4.5W)**, 23' **(3.6W)**, 34' **(2.5W)**, 36' **(1.5W)**
Luminaire Voltage	24VDC

PRODUCT INFORMATION
- For accent, decorative, surface, recessed, or pendant lighting
- 24 Volts DC for easy and safe installation
- Long life, energy efficient LEDs
- Can be ordered to specific lengths for when exact dimensions are known
  Example: 10 x 10'6"
- Plug and light system
- Lead wires are typically 36" long and exit on one end

READ ENTIRE GUIDE BEFORE STARTING INSTALLATION

Important Notice: Verify correct luminaire was received with correct color temperature, voltage, and wattage before cutting or installing. ALUZ will not be responsible if incorrect luminaire is installed.

END VIEWS / DIMENSIONS

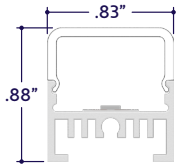

Clear Lens Square **(CLS)**
50% Semi-Frosted Lens Square **(SFS)**
100% Frosted Lens Square **(FS)**

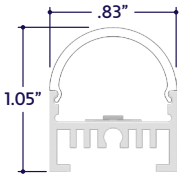

Clear Lens Round **(CLR)**
50% Semi-Frosted Lens Round **(SFR)**
100% Frosted Lens Round **(FR)**

ELECTRICAL REQUIREMENTS
- Luminaires require a 24 Volt DC remote driver.
- To calculate driver size, determine Watts per Foot.
  Example: 1.5W per Foot
- Determine Length in Feet.
  Example: 30'
- Calculate Load: Multiply Watts per Foot x Length in Feet
  Example: 1.5W x 30'= 45W
- Choose a driver from catalog.
  Example: 60 Watt Driver
- Determine maximum driver distance using Maximum Wire Length Table on drivers page.
  Example: 45 watts is between 40W and 60W. Using #14 wire, maximum distance is 37' from driver to first LED.

INSTALLATION RECOMMENDATIONS
- Luminaires must be mechanically attached directly to mounting surface using mounting clips, channels, or other appropriate means.
  Refer to installation step by step pages for details.
- Conduit raceway should be sleeved at one end for low voltage wires going to driver.

INSTALLATION TOOLS REQUIRED
- Electric Hammer Drill
- 14.4 to 28 Volt Cordless Drill
- Phillips Bits
- Utility Knife
- Electrical Cord
- Marker
- Wire Stripper
- Long Nose Pliers
- Drill Bits - Concrete or Wood
- Electrical Three Ways
- Safety Glasses
- Measuring Tape
- Laser Line or Chalk Line

1170 N Red Gum St, Anaheim, CA 92806

aluz.lighting info@aluz.lighting 866.ALUZ.LTG | 714.535.7900

© ALUZ All Rights Reserved. ALUZ reserves the right to make changes or withdraw specifications without prior notice.

WARNING

When using LED Lightstrip for any application, basic safety precautions should always be followed to reduce the risk of fire, electric shock, and personal injury. LED Lightstrip must be installed in accordance with the NEC or CEC as applicable. ALUZ will not be responsible for any damage or malfunction caused by the following:

- Ensure power is off before installation begins, during replacements, additions, or repairs.
- Do not use LED Lightstrip if damaged, such as broken boards, loose connections, or frayed wire insulation. Inspect before installing.
- Do not install LED Lightstrip in hazardous locations.
- Do not cover LED Lightstrip with any material, as it may cause LEDs to overheat, melt, or ignite. **(Fig. 1)**
- Do not paint on or over fixture lens or LEDs.
  Paint or any other substance on lens or LEDs will cause a shift in color temperature.
- Soffit must be evenly painted with a neutral white to avoid color shift.
- Do not modify LED Lightstrip in the field.
- Do not overlap LED Lightstrip luminaires in any way.
- Only use LED Lightstrip with specified rated voltages. Do not exceed the specified voltage for any LED Lightstrip luminaire.
- Do not use LED Lightstrip extrusion as a raceway for additional wire. Non-factory feed through wires inside LED Lightstrip will void warranty.
- Ground Fault Circuit Interrupter (GFCI) protections should be provided on circuits or outlets when LED Lightstrip is used for outdoor applications.
- Surge protector must be set up for electrical power system to avoid damaging LED Lightstrip lighting system.
- Do not connect wires together, follow provided wiring diagrams.
- Do not cut wire while energized.
- Do not connect LED Lightstrip to power source while spooled or coiled. **(Fig. 2)**
- Do not exceed maximum run lengths.
- Do not mount LED Lightstrip with staples, nails, or like means that might damage the insulation.
  Mount with double-sided tape and mounting clips.
- Do not install mounting clips over LED diodes. **(Fig. 3)**
- Do not penetrate LED Lightstrip with any foreign object. **(Fig. 4)**
- Do not mount LED Lightstrip inside tanks or enclosures of any kind.
- Do not use improper screw head type on mounting clips. It will cause the mounting clip to open up and become dysfunctional.
- Do not modify mounting clips.
- Do not mount fixture with less than the minimum number of mounting clips required. See mounting clips section for details.
- Do not force LED Lightstrip into a space that is too small.
- Do not force LED Lightstrip with cord grip into soffit.
- Do not install LED Lightstrip at an angle within a cove. Only install fixtures straight within a cove.
- Do not bend extrusion around radius.
- Do not submerge dry or wet location LED Lightstrip in any liquid.
- Do not install wet location in outdoor coves without proper drainage. **(Fig. 5)**
- Do not install LED Lightstrip in any area that is continuously exposed to flowing or pooling water, such as underneath drain pipes, sprinklers, fountains, misters, etc.
- Do not install connectors without shrink tube for wet location. **(Fig. 6)**
- Do nut use a lighter or open flame to heat shrink tube. **(Fig. 7)**
- Do not cut, puncture, or penetrate LED Lightstrip aluminum housing, end caps, or lens covers.
- Do not drop, bang, or rest weight upon LED Lightstrip.
- Do not apply excessive pressure to any part of LED Lightstrip or LEDs. **(Fig. 8)**
- Do not bend LED Lightstrip power cord or continuous connector past permitted bend radius. Bending past permitted bend radius will break the seal of the cordgrip or damage the insulation. 1.5" minimum bend radius. **(Fig. 9)**
- Do not install LED Lightstrip in a zig zag fashion. **(Fig. 10)**
- Do not fold, crease, or twist LED Lightstrip. **(Fig. 11)**
- Do not bend lightstrip along a horizontal plane. **(Fig. 12)**
- Do not overlap LED Lightstrip at any location. **(Fig. 13)**
- Do not cross or overlap extrusions and twist lightstrip to overlap. **(Fig. 14)**
- Do not install LED Lightstrip in places where the power cord is subject to continuous flexing.
- Do not twist continuous connector or power cord.
- Do not hold, carry, or suspend LED Lightstrip by the power cord.
- Do not install LED Lightstrip on ceilings without mounting clips. **(Fig. 15)**

FIGURES

Fig. 1

Fig. 2

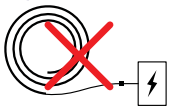

Fig. 3

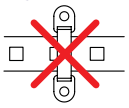

Fig. 4

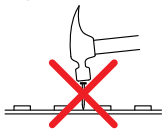

Fig. 5

Fig. 6

Fig. 7

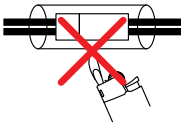

Fig. 8

Fig. 9

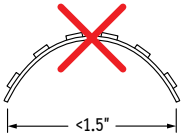

Fig. 10

Fig. 11

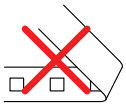

Fig. 12

Fig. 13

Fig. 14

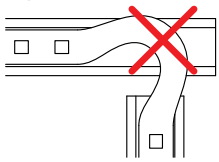

Fig. 15

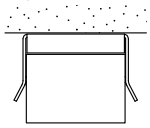

CLEANING MATERIALS

The use of solvents and/or cleaners which are not compatible with polycarbonate will result in the softening, crazing, and/or cracking of the plastic part. This is especially true of polycarbonate lamps and mounting bases which may be under stress in their normal applications.

COMPATIBLE WITH POLYCARBONATE

- Mild soap and water
- Mineral Spirits
- Isobutyl Alcohol
- VM and P Naphtha
- Varsol No.2
- Mexane
- Freone TF and TE-35
- Ethanol
- Dirtex
- 2% Sol. Reg. Joy
- 10% Sol Bon Ami
- White Kerosene
- Methyl Alcohol
- Heptane
- Petroleum Ether / 65°C
- Isopropyl Alcohol
- Lacryl PCL-2035 Polycarbonate Cleaner

NOT COMPATIBLE WITH POLYCARBONATE

- Trichlor
- Gasoline
- Liquid Detergents
- Acetone
- Carbon Tetrachloride
- Pink Lux (Phosphate free)
- Triclene
- Chlorinated Hydrocarbons
- #1 & #3 Denatured Alcohol
- Methyl Ethyl Keytone (MEK)
- Texize-8006, 8129, 8758
- MIBK
- Liquid Cleaner – 8211
- Toluol
- Agitene
- Benzol
- Ajax
- Kleenol Plastics
- Lysol
- Stanisol Naphtha
- Oils
- Lemon Joy (phosphate free)
- Diversol
- Lestoil

© ALUZ All Rights Reserved. ALUZ reserves the right to make changes or withdraw specifications without prior notice.

FORWARD / REVERSE PHASE DIMMING (PH)

Technical Requirements For Control Equipment

- Magnetic Low Voltage (MLV): Magnetic (core and coil, toroidal) transformer-supplied low voltage lighting.
- Electrical Characteristic: Inductive
- Special Requirements: Symmetric cycles (VDC ≤ 2), smooth turn off (positive and negative periods are equal for safe MLV transformer operation).

PHASE DIMMER RATINGS

The stated VA (volt-ampere) rating is the rated capacity of the dimmer which includes the magnetic transformer heat losses and the lamp load. A transformer dissipates less than 20% of the connected load as heat. The lamp load plus the transformer loss determine the dimmer capacity required. See the example below.

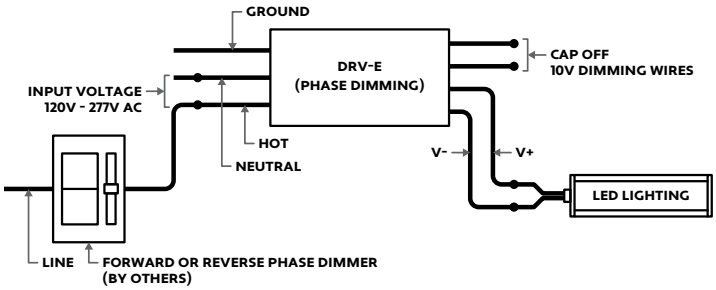

PHASE DIMMING WIRING DIAGRAM

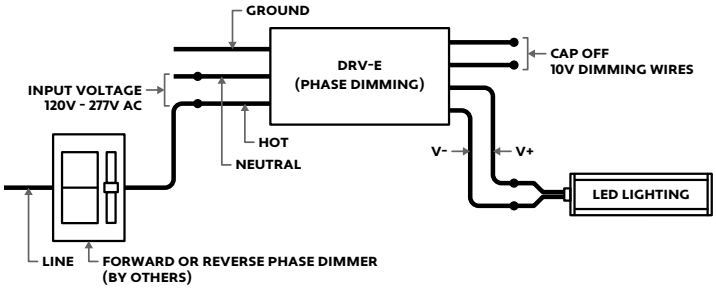

Notes: Wire colors vary based on model. See individual submittal for more information, or refer to wiring diagram on driver label. Confirm wire colors before connecting to power source. Cap off dimming wires individually for non-dimming applications. For best dimming performance, use a minimum load of 50% and a maximum load of 80%.

0-10V DIMMING (10V)

Technical Requirements For Control Equipment

- The light output of the LEDs operated by the controllable LED driver is controlled by DC voltage applied to the control input leads (gray and violet). The actual response curve of LED driver current versus control voltage.
- The control device must be capable of accepting or sinking the DC current flow from the driver. The DC current from the driver that must be sinked by the control circuit is approximately 150uA (+/50% for isolated dim interfaces, up to 1.5mA for non isolated dim interfaces).
- If the control bus is opened, or if the control device internally opens the control bus under some conditions, the voltage on the control bus will then be a function of the drivers, which is 10-15V. Maximum light output will be delivered under this condition.
- If the control bus is shorted either by a mechanical switch in the control or by the circuitry of the control device, or inadvertently in the wiring, the current on the control bus will be less than 1.5mA.
- As can be determined from the two items, simple two-level operation of the drivers can be achieved by proper usage and application of a simple open/closed switch on the control bus with maximum light being achieved when the switch is open and minimum light with the switch is closed.
- The driver is intended to be used with control voltages between 0-10VDC volts peak maximum on the driver control leads.
- Control equipment intended to control more than one driver must be capable of sinking the current supplied tot the control bus by the maximum number of drivers specified for the control device. At any given level setting it must maintain control bus voltage constant within a range of +/-5% as the number of drivers connected to the control bus varies from a minimum of one driver up to the maximum number specified for the control device.
- Driver of various ratings may be mixed on the same control system.

0-10V DIMMER RATINGS

The stated VA (volt-ampere) rating is the rated capacity of the dimmer which includes the electronic transformer heat losses and the lamp load. A transformer dissipates less than 20% of the connected load as heat. The lamp load plus the transformer loss determine the dimmer capacity required. See the example below.

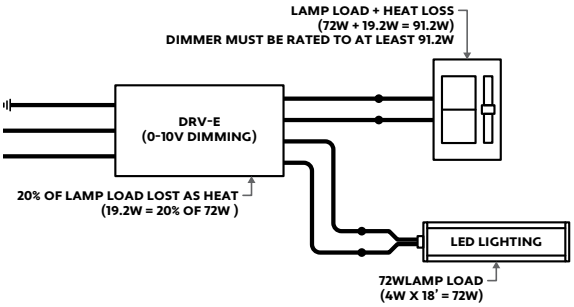

0-10V DIMMING WIRING DIAGRAM

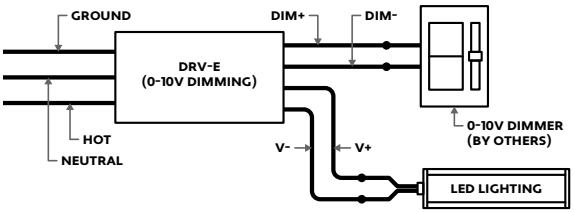

© ALUZ All Rights Reserved. ALUZ reserves the right to make changes or withdraw specifications without prior notice.

MAXIMUM RUN BASED ON 80% LOAD OF ELECTRONIC DRIVER MAXIMUM WATTAGE

Driver Wattage	80% Load	1.5W Max Run	2W Max Run	2.5W Max Run	3W Max Run	3.6W Max Run	4W Max Run	4.5W Max Run	5W Max Run	5.5W Max Run	6W Max Run	6.5W Max Run
30	24W	16’	12’	9.6’	8’	6.6’	6’	5.3’	4.8’	4.36’	4’	3.69’
60	48W	32’	24’	19.2’	16’	13.3’	12’	10.6’	9.6’	8.7’	8’	7.3’
96	76.8W	51.2’	38.4’	30.7’	25.6’	21.3’	19.2’	17.1’	15.36’	13.9’	12.8’	11.8’
150	120W	80’	60’	48’	40’	33.3’	30’	26.6’	24’	21.8’	20’	18.4’
200	160W	106.6’	80’	64’	53.3’	44.4’	40’	35.5’	32’	29’	26.6’	24.6’
300	240W	160’	120’	96’	80’	66.6’	60’	53.3’	48’	43.6’	40’	36.9’

Note: Maximum Run refers to the total length of lighting that can be connected to a single driver. Maximum Runs for individual products still apply.

MAXIMUM WIRE LENGTH TO PREVENT EXCESS VOLTAGE DROP

Wire Size	Load Wattage (W)												
	15	**24**	**30**	**48**	**60**	**76**	**96**	**120**	**150**	**160**	**200**	**240**	**300**
20 AWG	79’	49’	39’	25’	20’	16’	12’	10’	8’	7’	6’	5’	4’
18 AWG	125’	78’	63’	39’	31’	25’	20’	16’	13’	12’	9’	8’	6’
16 AWG	199’	125’	100’	62’	50’	39’	31’	25’	20’	19’	15’	12’	10’
14 AWG	317’	198’	158’	99’	79’	63’	50’	40’	32’	30’	24’	20’	16’
12 AWG	504’	315’	252’	157’	126’	100’	79’	63’	50’	47’	38’	31’	25’
10 AWG	801’	501’	400’	250’	200’	158’	125’	100’	80’	75’	60’	50’	40’
8 AWG	1273’	796’	637’	398’	318’	252’	199’	159’	127’	120’	96’	80’	64’

MAXIMUM WIRING DISTANCE OF DRIVER TO LIGHTING

The maximum wiring distance of driver to LED Lighting refers to the wire used between the driver and first LED of the luminaire. If the wire gauge is inadequate for the wiring distance, the luminaire will receive decreased voltage, insufficient to power the LEDs. Refer to the table to determine appropriate wiring distances based on wire gauge and the LED load.

MOUNTING INSIDE AN ENCLOSURE

- Only mount drivers inside enclosures rated for your application
- Always ground drivers to enclosure
- Do not mount drivers without an enclosure
- Use enclosure knockouts and water-tight conduit fittings when applicable

DRIVER CARE

- Do not submerge drivers in any liquid
- Do not leave any exposed wires
- Do not cover driver without proper ventilation
- Do not install damaged driver
- Do not exceed maximum load

DIMMER TRIM VALUES

Set dimmer trim value as needed to prevent flickering and irregular dimming. Review dimmer specifications for trim value adjustment. Dimmers by others.

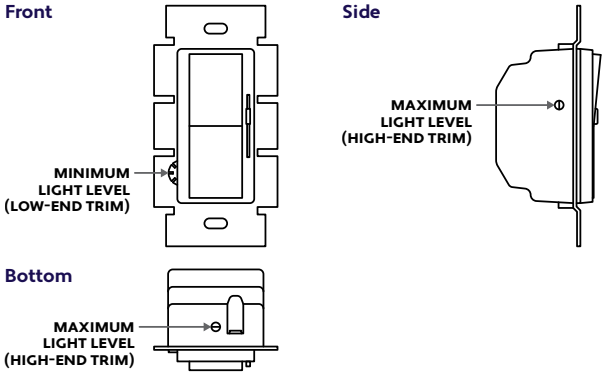

© ALUZ All Rights Reserved. ALUZ reserves the right to make changes or withdraw specifications without prior notice.

LUTRON HI-LUME 2-WIRE DIMMING (LTEA)

Technical Requirements For Control Equipment

- The Hi-lume 1% 2-Wire LED Driver (LTEA) is a high performance LED driver that provides a smooth, continuous, flicker-free 1% dimming for virtually any LED fixture. Primary voltage is 120V and secondary side is 12VDC or 24VDC. A rated life time of 50,000 hours @tc -149°F (65°C).Inrush current: < 2A. Minimum operating temperature ta = 32°F (0°C).
- Continuous, flicker-free dimming from 100% to 1%. Compatible with selected Maestro Wireless, RadioRA 2, HomeWorks QS, GRAFIK Eye QS, GRAFIK Systems, Quantum, and C•L Dimmers.
- The driver is California Title 24 JA8 Compliant.

Wiring Diagram for Controls Requiring Neutral (JA8 Compliant)

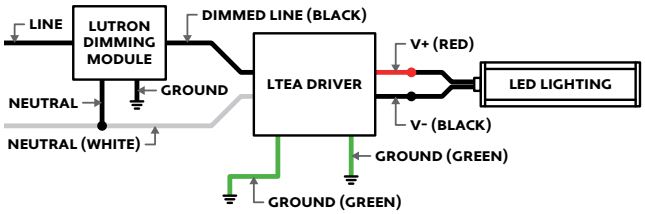

Wiring Diagram for Controls Not Requiring Neutral (JA8 Compliant)

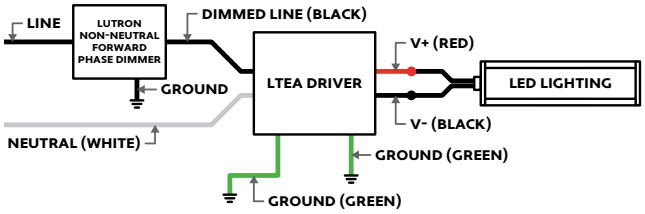

LUTRON HI-LUME 3-WIRE DIMMING (L3DA)

Technical Requirements For Control Equipment

- Hi-lume 1% EcoSystem/3-Wire Driver (L3DA) is a high-performance LED driver that provides smooth, continuous 1% dimming for virtually any LED fixture, primary voltage is 120–277 V~ at 50/60 Hz and secondary side is 12VDC or 24VDC. A rated life time of 50,000 hours @tc -149°F (65°C). Inrush current: < 2A. Minimum operating temperature ta = 32°F (0°C).
- Continuous, flicker-free dimming from 100% to 1%. Compatible with Energi Savr Node unit with EcoSystem, GRAFIK Eye QS control unit, PowPak dimming module with EcoSystem, and Quantum systems, allowing for integration into a planned or existing EcoSystem lighting control solution. Standard 3-wire, line-voltage phase control technology for consistent dimming performance.

Wiring Diagram for 3-Wire Controls

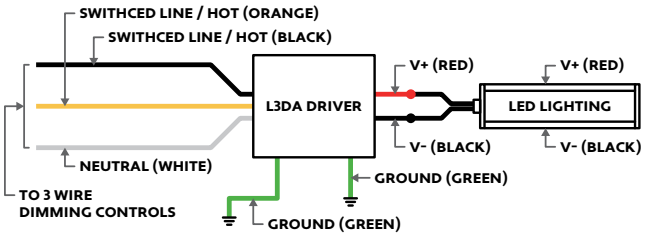

Wiring Diagram for EcoSystem Digital Controls

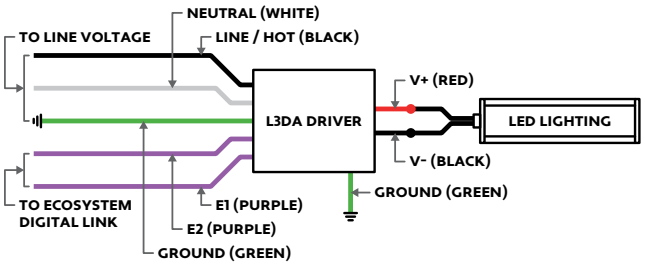

LUTRON HI-LUME 3-WIRE PREMIER DIMMING (L3D0)

Technical Requirements For Control Equipment

- Hi-lume Premier 0.1% EcoSystem / 3 Wire constant voltage 24V LED driver with Soft-on, Fade-to-Black. The Hi-lume Premier 0.1% Constant Voltage Driver is a high-performance LED driver capable of controlling up to 96W of 24V constant voltage loads. This driver provides smooth and continuous dimming down to 0.1% low-end. It is ideal for use with strip lighting in applications such as coves, under or over cabinet lighting and pathway lighting. The driver is UL Listed with an integrated wiring compartment and can be mounted up to 150'away from the load.
- Continuous, flicker-free dimming from 100% to 0.1%
- Soft-on, Fade-to-Black operation for EcoSystem controls: fades smoothly between 0% and 0.1% when turned on and off for an incandescent like dimming experience.
- PWM dimming meets IEEE1789 over the entire dimming range.
- UL Listed for United States and Canada (cULus®).
- NOM certified for Mexico.
- Field Adjustment Knob offers customer low-end light output tuning for better fixture-to-fixture matching.
- Guaranteed dimming performance when used with Lutron controls:
  - HomeWorks QS, Energi Savr Node units with EcoSystem controls, GRAFIK Eye QS with EcoSystem controls, PowPak with EcoSystem dimming modules, PowPak with EcoSystem wireless fixture controls, and Quantum systems, allowing for integration into a planned or existing EcoSystem lighting control solution.
  - Lutron 3-wire controls and interfaces.
- Protected from miswires of input power, up to 277 V~, to EcoSystem control inputs.
- Rated lifetime of 50,000 hours at 40 °C (104 °F) ambient temperature and max load.
- FCC Part 15
  - Class A (277 V~)
  - Class B (120 V~)
- The driver is California Title 24 JA8 Compliant.

Wiring Diagram for 3-Wire Controls (JA8 Compliant)

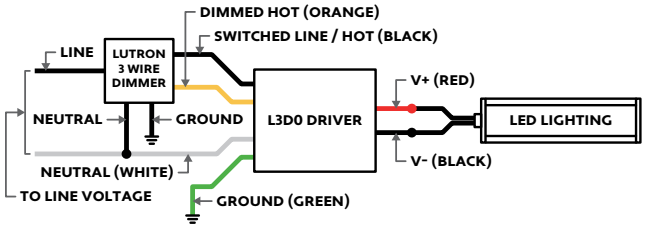

Wiring Diagram for EcoSystem Digital Controls (JA8 Compliant)

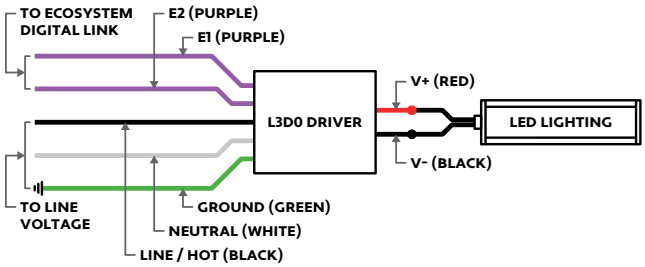

Note: Colors shown on wiring diagrams correspond to terminals on driver

© ALUZ All Rights Reserved. ALUZ reserves the right to make changes or withdraw specifications without prior notice.

DIAGRAM OF DRIVER

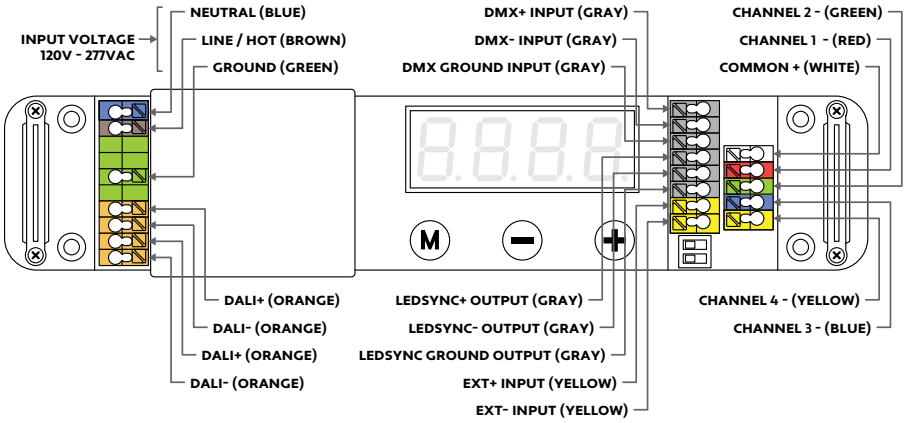

DIGITAL INTERFACE

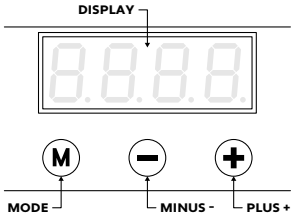

NOTES (DMX)

- Wire colors on diagram correspond to colors of driver terminals.
- Default DMX address of each luminaire is 001. Consult a third party DMX commissioner to modify at time of installation. ALUZ does not provide DMX commissioning.
- DMX Address must be set for each driver. Default DMX address is 001.
- A DMX Control System (by others) must be used to operate the lighting.
- The last driver in a daisy chain sequence must be terminated.
- Driver load not to exceed 100W.
- For best dimming performance, it is recommended to load drivers to a minimum of 50% (50W) and a maximum of 80% (80W).
- Up to 28 drivers may be daisy chained together using shielded cable specified for DMX wiring.
- Ensure DIP Switch 1 is set to ON (Left) to activate 24V operation.

DMX Wiring: Static White

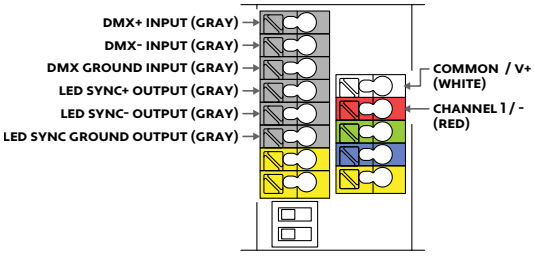

DMX Wiring: RGBW

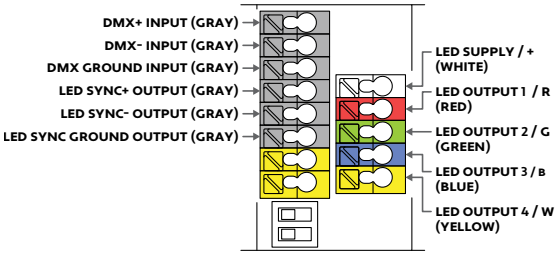

DMX Wiring: Dynamic White (DWH)

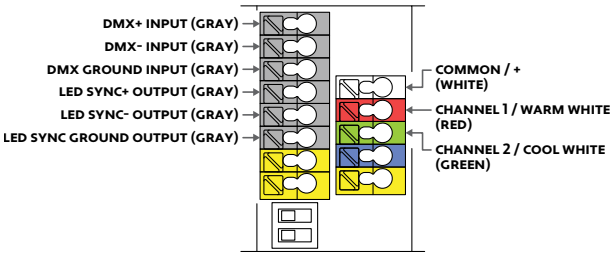

DMX Daisy Chain

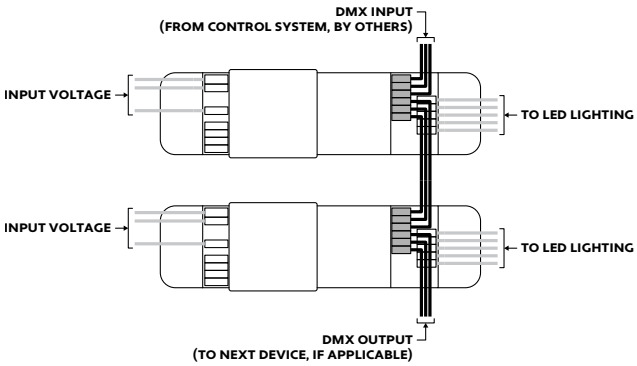

NOTES (DALI)

- Wire colors on diagram correspond to colors of driver terminals.
- DALI commissioning to be performed by a third party at time of installation. ALUZ does not provide DALI commissioning.
- DALI Address must be set for each driver.
- A DALI Control System (by others) must be used to operate the lighting.
- Driver load not to exceed 100W.
- For best dimming performance, it is recommended to load drivers to a minimum of 50% (50W) and a maximum of 80% (80W).
- Up to 28 drivers may be daisy chained together using shielded cable specified for DALI wiring.
- Ensure DIP Switch 1 is set to ON (Left) to activate 24V operation.

DALI Daisy Chain

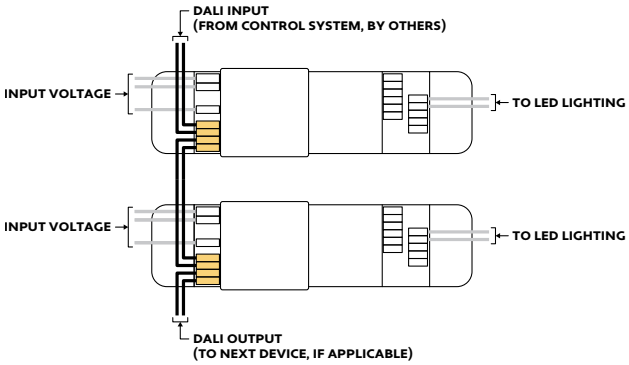

© ALUZ All Rights Reserved. ALUZ reserves the right to make changes or withdraw specifications without prior notice.

MODE OF OPERATION

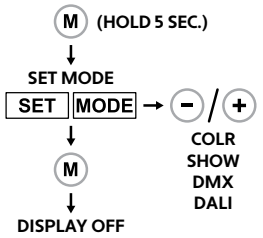

- Set Mode to DMX or DALI

SET LED GROUPS

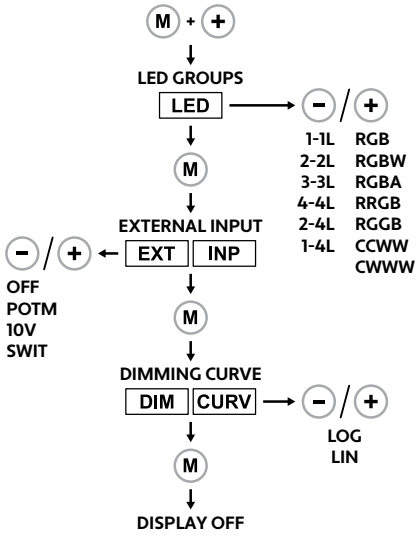

- Set LED Groups to RGBW for RGBW lighting.
- Set LED Groups to CCWW for Dynamic White lighting.
- Set External Input to OFF.
- Set Dimming Curve to Linear.

STANDALONE OPERATION (Color / Show)

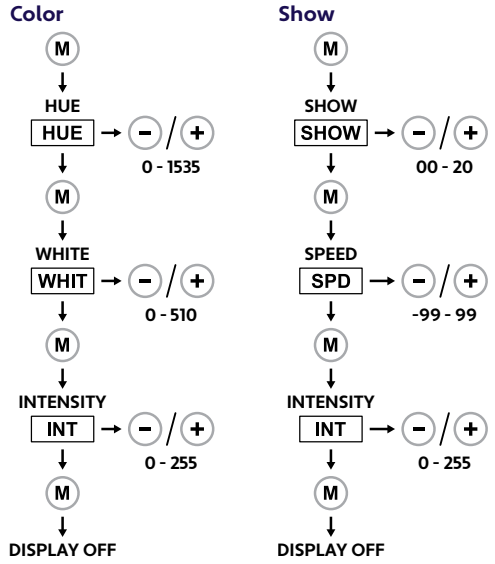

- Standalone Operation should only be used when a control system is not present to control the lighting (not recommended).

STANDALONE OPERATION (Network Operation)

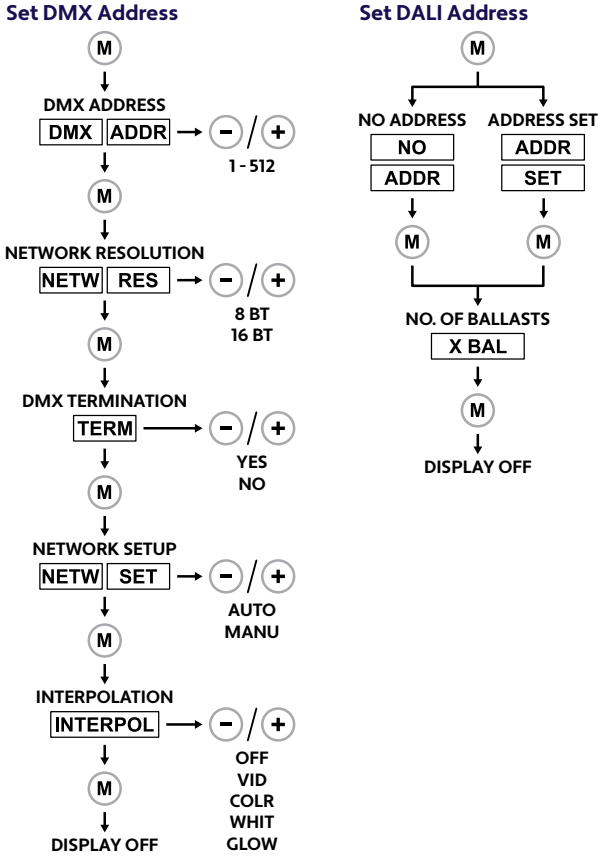

- Consult with a third-party DMX or DALI professional to determine which settings are best for your application. ALUZ does not provide DMX or DALI commissioning.

OTHER FUNCTIONS

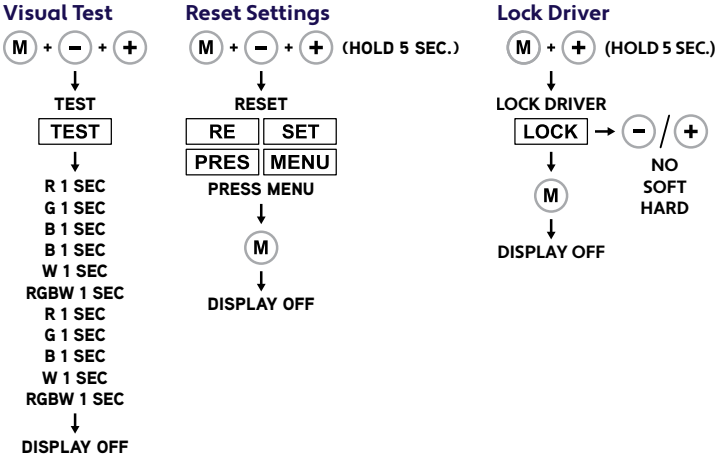

- Always perform the visual test function after wiring to ensure all channels are behaving appropriately.
- Reset driver to factory settings if necessary. It is recommended to reset each driver before adjusting settings for the first time.
- Lock driver if applicable (not recommended).

© ALUZ All Rights Reserved. ALUZ reserves the right to make changes or withdraw specifications without prior notice.

APPLICATION GUIDELINES

- Follow the below diagrams and steps if applicable to your installation.
- LED lightstrip requires a team effort to ensure a secure and correct installation.
- Use a wire puller stand to prevent tangles, twists, and snags.
- For Mud-In applications, start lightstrip from power source side and allow up to 2" of excess lightstrip to exit through end cap.

NOTE

- Extrusions are shipped to exact length of specified measurements.
- Due to cut increment restrictions (2", +/- 0.125" Tolerance), the lightstrip is shipped to the closest measurement ordered. Center the lightstrip in the extrusion.
- Remove adhesive backing completely to allow heat transfer tape to make contact with the aluminum extrusion.

LED LIGHTSTRIP

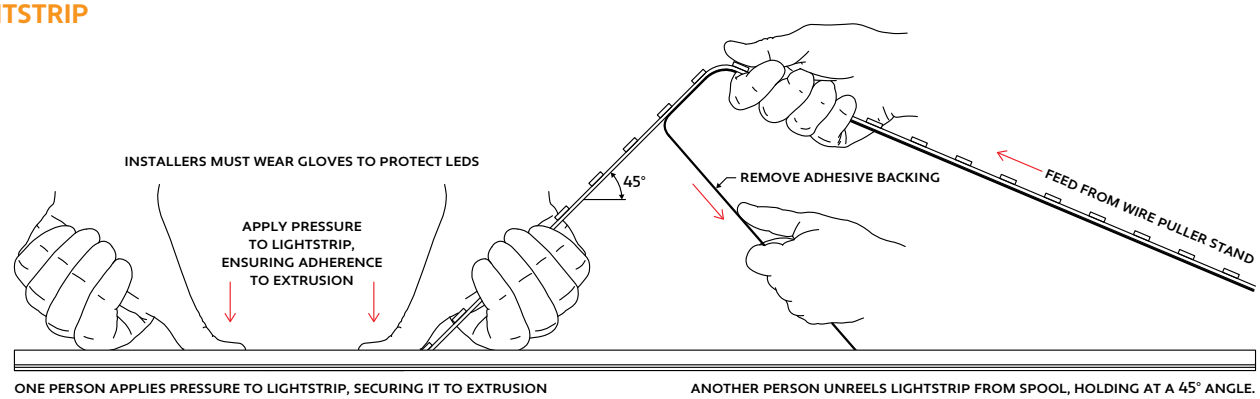

ONE PERSON APPLIES PRESSURE TO LIGHTSTRIP, SECURING IT TO EXTRUSION

ANOTHER PERSON UNREELS LIGHTSTRIP FROM SPOOL, HOLDING AT A 45° ANGLE.

SOLDERING GUIDE

1 Cut lightstrip to desired length. Include both sets of solder pads by cutting to the left or right of designated markings, allowing more space for soldering.

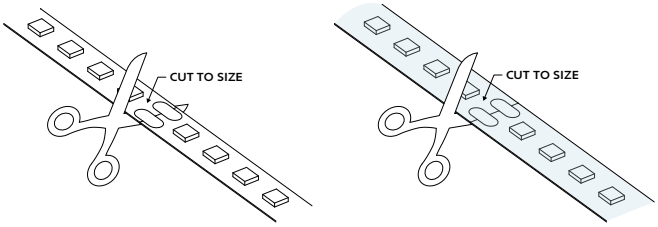

2 Prepare wires by stripping 1/8" from the end of each wire, then tin the tips of the wire with solder. Apply heat to stripped portion of wire, then add a small amount of solder until fully covered in solder.

3 If applicable, use a mat knife to remove encapsulation from the section of lightstrip with solder pads. If lightstrip is not encapsulated, skip this step.

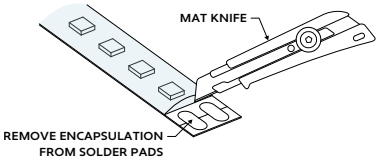

4 Solder wires to solder pads. Solder the positive wire (Red or Black with ridged jacket) to the pad marked "+24V". Solder the neutral wire (White or Black with smooth jacket) to the pad marked "-".
Note: Solder iron not to exceed 720°F. Heat joint with tip of iron. Heat both the solder pad and wire. Add a small drop of solder to the tip of solder iron to quickly transfer the heat to joint; it should melt and flow smoothly, covering the wire and pad. Remove iron once enough solder has been added. Allow 5 seconds for the joint to cool.

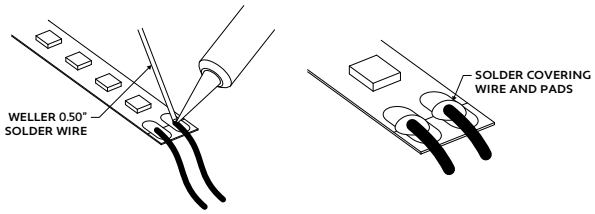

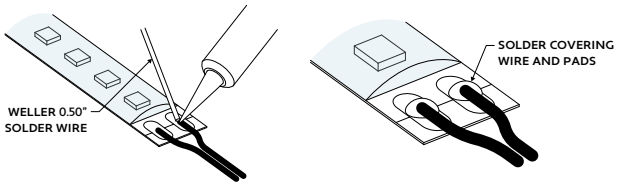

5 If applicable, apply silicone over soldered connections. All connections must be completely covered with silicone to create weatherproof seal. Only use outdoor rated silicone. If lightstrip is not encapsulated, skip this step.

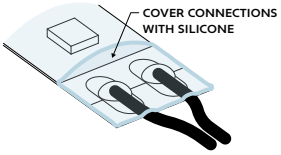

6 For wet location applications, use shrink tube to cover soldered connections and end of encapsulated lightstrip. Cut a small piece of shrink tube to create the end piece. Cut a longer piece to cover the soldered connection and lead wires. Heat shrink tube until it shrinks all the way down, fitting snugly over the parts. Do not cover LEDs with shrink tube.

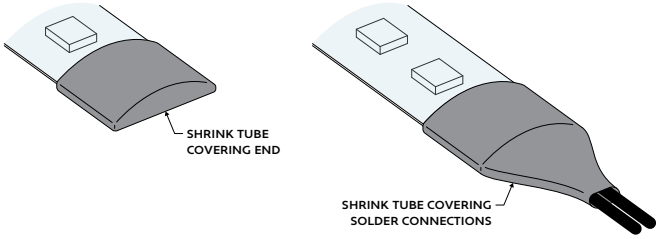

Note: Appearance of lightstrip may differ from example shown. Refer to wiring diagrams before soldering any wires.

© ALUZ All Rights Reserved. ALUZ reserves the right to make changes or withdraw specifications without prior notice.

UNASSEMBLED APPLICATIONS

1. Measure area where luminaire will be installed. Use a laser line to create a reference line along installation area, ensuring consistent alignment of mounting clips. Mark location where each mounting clip will be installed along reference line.
2. Use 1 mounting clip every 2', rounded up. Use a minimum of 2 mounting clips per luminaire segment. For vertical applications, create a stopper at the bottom of the run to prevent sliding.
3. Use a mounting clip at the junction between two luminaire segments.
   Example: 20' Run.

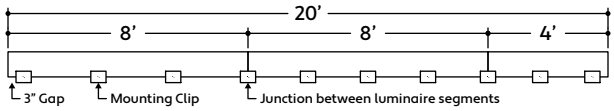

4. Lay mounting clips along reference line and pre-drill using an appropriate drill bit for surface material and screw size. Typical screw size is 8/32 x 1".
   Note: Allow 1/4" clearance on each side of mounting clip to account for lateral expansion. Only install mounting clips on flat, even surfaces.
5. Screw mounting clips to surface, then snap luminaire into mounting clips.

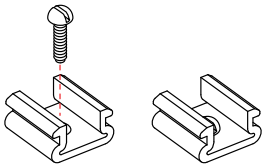

ASSEMBLED APPLICATIONS

1. Measure area where luminaire will be installed. Use a laser line to create a reference line along installation area, ensuring consistent alignment of mounting clips. Mark location where each mounting clip will be installed along reference line.
2. Use 1 mounting clip every 2', rounded up. Use a minimum of 2 mounting clips per luminaire segment. For vertical applications, create a stopper at the bottom of the run to prevent sliding.
3. Space mounting clips evenly throughout the run.
   Example: 20' Run.

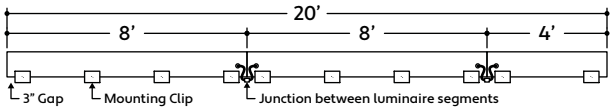

ASSEMBLED DIMENSIONS

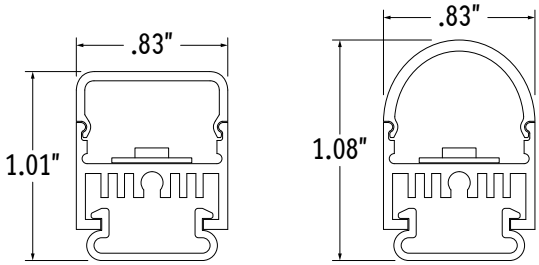

Square Lens **Round Lens**

© ALUZ All Rights Reserved. ALUZ reserves the right to make changes or withdraw specifications without prior notice.

1 Measure area where luminaire will be installed. Use a laser line to create a reference line along installation area, ensuring consistent alignment of mounting channels.

2 Lay extrusions along chalk line and drill at least 3 countersink holes per extrusion segment. Drill additional holes as needed.

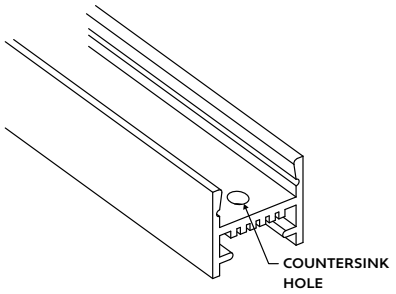

3 Screw extrusions to surface using countersink screws.
Note: Ensure extrusions are aligned. Misalignment will prevent lens from snapping in.

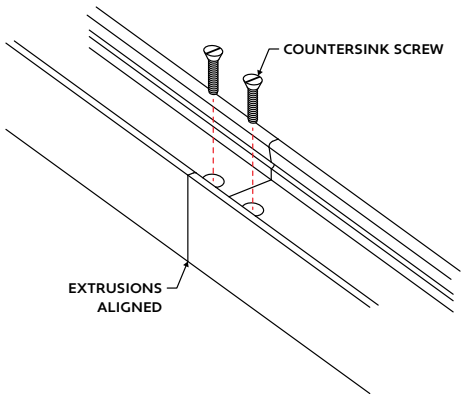

4 After all extrusions have been securely mounted, remove adhesive backing from lightstrip and adhere in place along extrusion channel, ensuring lightstrip is secure inside extrusion.
Note: Refer to Application Guidelines to ensure correct installation.

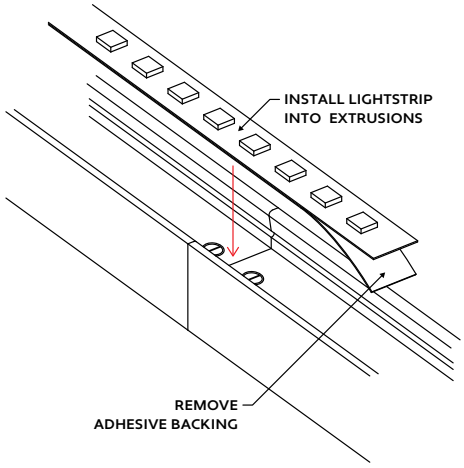

5 If applicable, connect disconnects between luminaires or solder connectors using the steps from Application Guidelines.

6 Install lens into extrusion, overlapping where two extrusions meet. Plan your cuts so that the lens will always overlap where two extrusions meet. Overlapping lenses helps keep extrusions aligned and prevents light leaks.

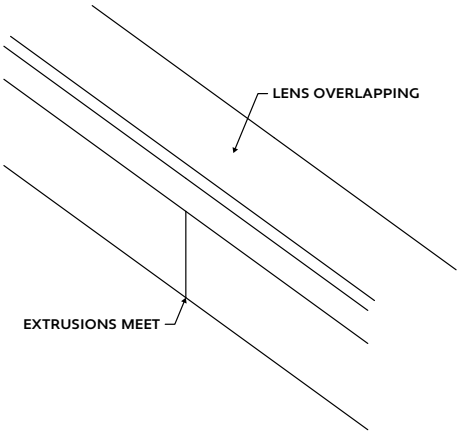

7 Perform a continuity test before connecting luminaire to power source.

© ALUZ All Rights Reserved. ALUZ reserves the right to make changes or withdraw specifications without prior notice.

1 Measure area where luminaire will be installed. Use a laser line to create a reference line along installation area, ensuring consistent alignment of mounting channels. Mark location where mounting channels will be installed along reference line.

2 Lay extrusions along chalk line and drill at least 3 countersink holes per extrusion. Drill additional holes as needed.

3 Screw extrusions to surface using countersink screws.
Note: Ensure extrusions are aligned. Misalignment will prevent lens from snapping in.

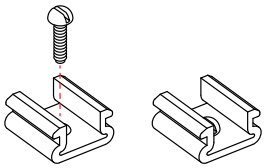

4 After all extrusions have been securely mounted, remove adhesive backing from lightstrip and stick in place along extrusion channel, ensuring lightstrip is secure inside extrusion.

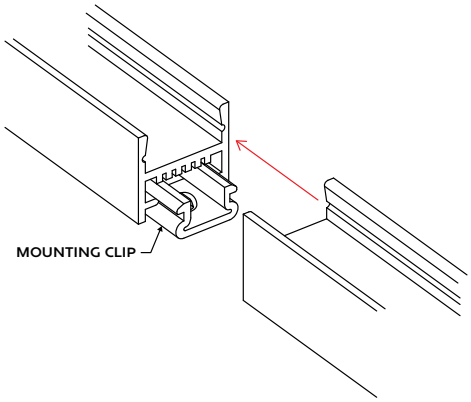

5 After all extrusions have been securely mounted, remove adhesive backing from lightstrip and stick in place along extrusion channel, ensuring lightstrip is secure inside extrusion.

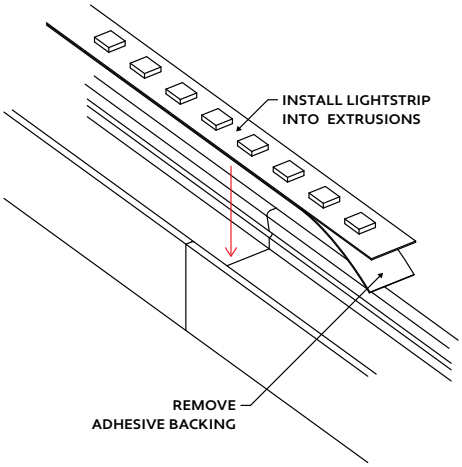

6 If applicable, connect disconnects between luminaires or solder connectors using the steps from Application Guidelines.

7 If applicable, connect disconnects between luminaires or solder connectors using the steps from Application Guidelines.

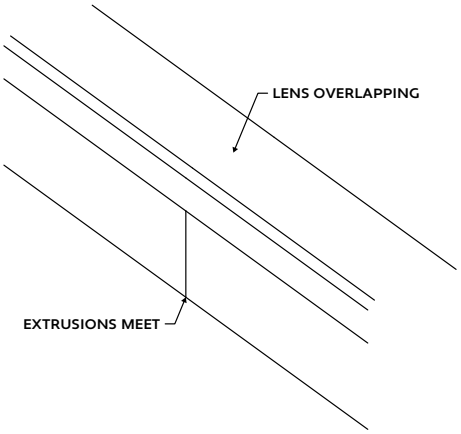

8 Perform a continuity test before connecting luminaire to power source.

© ALUZ All Rights Reserved. ALUZ reserves the right to make changes or withdraw specifications without prior notice.

1. Measure area where luminaire will be installed. Use a laser line to create a reference line along installation area, ensuring consistent alignment of mounting clips. Mark location where each mounting clip will be installed along reference line.

2. Mark location where mounting clips will be installed.
Note: The number of required mounting clips differs for dry and wet location products. Verify number of mounting clips is appropriate for installation environment before installing. Do not install luminaires with inadequate number of mounting clips.

3. Lay mounting clips along reference line and pre-drill using an appropriate drill bit for surface and screw size. Recommendation: 8/32 x 1" screw.
Note: Allow 0.25" clearance for lateral expansion of assembled mounting clips. Only install mounting clips on flat, even surfaces.

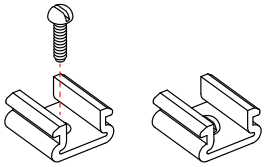

4. Screw mounting clips to surface, then snap luminaires into mounting clips.

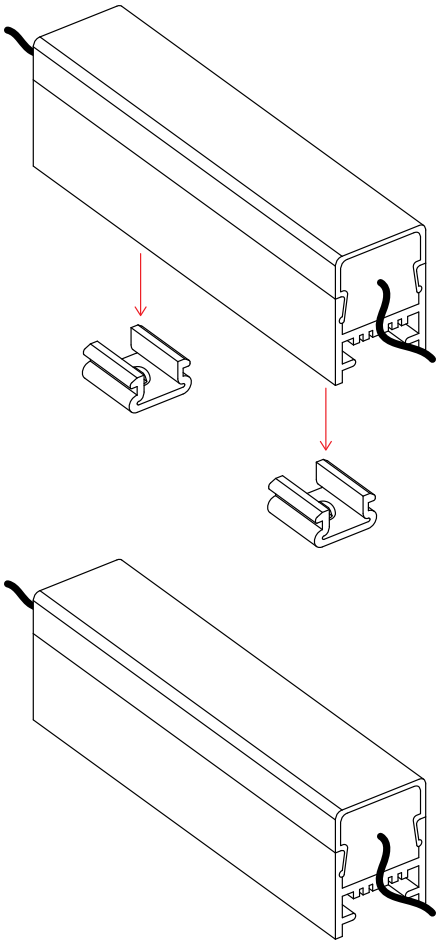

5. If applicable, position jumper wires between luminaire segments as needed.

6. If applicable, connect disconnects between luminaires or solder connectors using the steps from Application Guidelines.

7. Perform a continuity test before connecting luminaire to power source.

© ALUZ All Rights Reserved. ALUZ reserves the right to make changes or withdraw specifications without prior notice.

1 Measure area where luminaire will be installed. Use a laser line to create a reference line along installation area, ensuring consistent alignment of mounting channels.

2 Lay extrusions along chalk line and drill at least 3 countersink holes per extrusion Drill additional holes as needed.

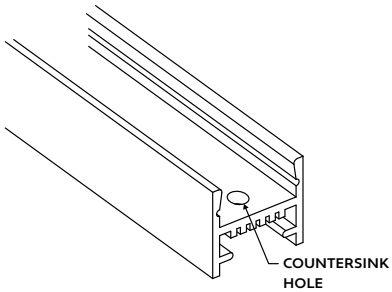

3 Screw extrusions to surface using countersink screws.
Note: Ensure extrusions are aligned. Misalignment will prevent lens from snapping in.

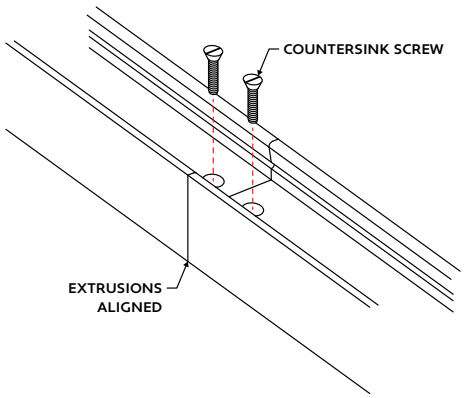

4 After all extrusions have been securely mounted, remove adhesive backing from lightstrip and adhere in place along extrusion channel, ensuring lightstrip is secure inside extrusion.
Note: Refer to Application Guidelines to ensure correct installation.

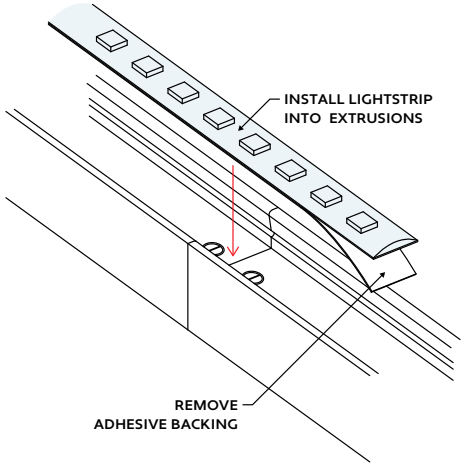

5 If applicable, connect disconnects between luminaires or solder connectors using the steps from Application Guidelines.

6 Install lens into extrusion, overlapping where two extrusions meet. Plan your cuts so that the lens will always overlap where two extrusions meet. Overlapping lenses helps keep extrusions aligned and prevents light leaks.

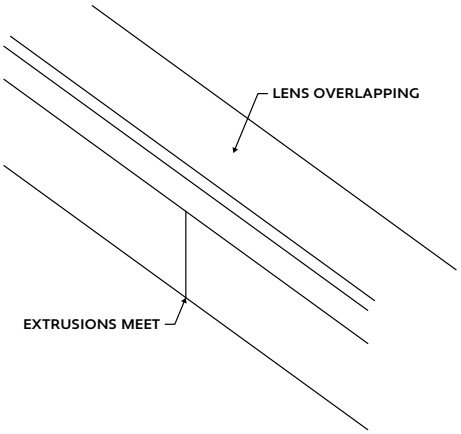

7 Perform a continuity test before connecting luminaire to power source.

© ALUZ All Rights Reserved. ALUZ reserves the right to make changes or withdraw specifications without prior notice.

1 Measure area where luminaire will be installed. Use a laser line to create a reference line along installation area, ensuring consistent alignment of mounting clips. Mark location where each mounting clip will be installed along reference line.

2 Mark location where mounting clips will be installed.
Note: The number of required mounting clips differs for dry and wet location products. Verify number of mounting clips is appropriate for installation environment before installing. Do not install luminaires with inadequate number of mounting clips.

3 Lay mounting clips along reference line and pre-drill using an appropriate drill bit for surface and screw size. Recommendation: 8/32 x 1" screw.
Note: Allow 0.25" clearance for lateral expansion of assembled mounting clips. Only install mounting clips on flat, even surfaces.

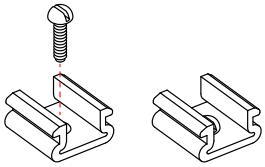

4 Screw mounting clips to surface, then snap extrusions into mounting clips.
Note: Ensure extrusions are aligned. Misalignment will prevent lens from snapping in.

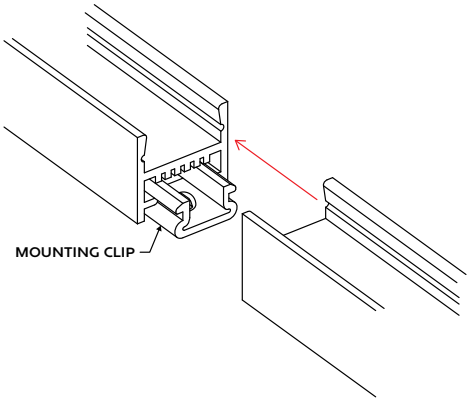

5 After all extrusions have been securely mounted, remove adhesive backing from lightstrip and adhere in place along extrusion channel, ensuring lightstrip is secure inside extrusion.
Note: Refer to Application Guidelines to ensure correct installation.

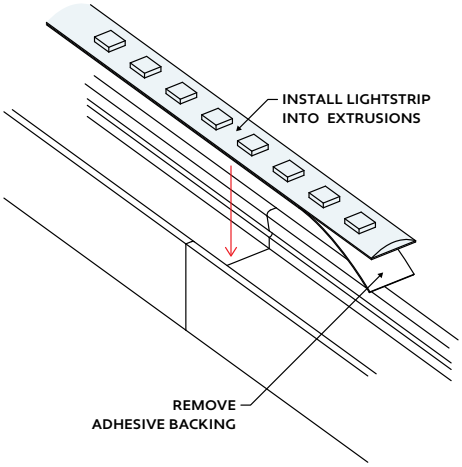

6 If applicable, connect disconnects between luminaires or solder connectors using the steps from Application Guidelines.

7 Install lens into extrusion, overlapping where two extrusions meet. Plan your cuts so that the lens will always overlap where two extrusions meet. Overlapping lenses helps keep extrusions aligned and prevents light leaks.

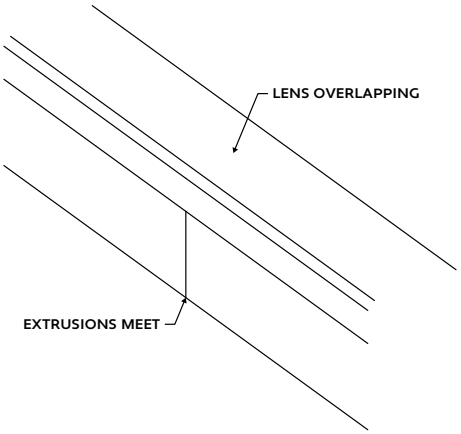

8 Perform a continuity test before connecting luminaire to power source.

© ALUZ All Rights Reserved. ALUZ reserves the right to make changes or withdraw specifications without prior notice.

TROUBLESHOOTING TIPS

- Do not reset the breaker multiple times.
- If the unit is overloaded, the breaker will trip, shutting off the driver and lighting.
- If the breaker reset button has been held down by hand or any type of pressure, such as duct tape, or if the breaker has been reset multiple times without troubleshooting, the unit will:
  - Burn the driver bobbin.
  - Burn the thermal or magnetic breaker.
  - Burn the driver lead wires due to high amperage caused by overload.
  - Short circuit in line which will not allow the breaker to reset.
  - Damage the lighting.

1 Turn off power before beginning. Verify power is off by using a non-contact circuit tester (by others).

2 Check lightstrip for damage, such as cuts, punctures, twisting, or crushing. If there is excessive damage to the lightstrip, the lightstrip must be replaced.

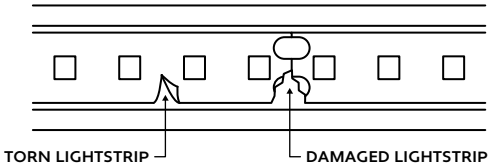

3 Check the run for any particles that may cause a short. Check the end cap, power connector, and lightstrip for any metal flakes or shavings. Clear the run of any shavings or particles if present, then perform a continuity test to confirm the short has been eliminated.

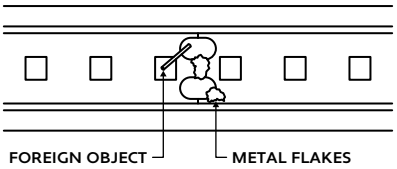

4 Check lightstrip cuts to ensure they are clean. Frayed, split, or sloppily cut lightstrip can cause the positive and negative contacts to touch, causing a short.

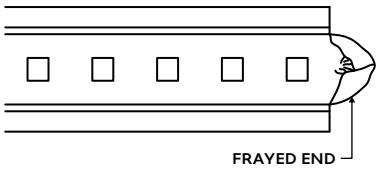

5 Check connections in the line. Ensure all splice connections are secure and properly sealed with shrink tube and silicone for outdoor applications. Ensure that wiring is not bent past the permitted wiring bend radius (1.5”).

6 Check the run for any water inside end cap, power connector, and lightstrip. If water or condensation is has caused damage, the lightstrip must be replaced.

© ALUZ All Rights Reserved. ALUZ reserves the right to make changes or withdraw specifications without prior notice.

CONTINUITY TEST

A continuity test is performed to determine if electricity can pass through two points on an electrical circuit. This helps identify shorts or malfunctions in the line or luminaire. Use a multimeter or continuity tester to perform the steps below.

- Always perform a continuity test before connecting to power source.
- Malfunctions are not always as obvious as the lights not turning on.
- A short or malfunction in the line or luminaire will cause damage over time, irreparably damaging the lighting and voiding warranty.

EXAMPLE OF MULTIMETER (BY OTHERS)

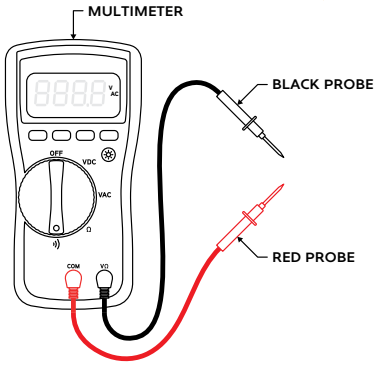

1 Turn off power before beginning. Verify power is off by using a non-contact circuit tester (by others). Touch the probe of the tester to the positive wire of the power source. The tester will light up if an electrical current is detected.

2 Setup your multimeter tester (by others). First, insert the black probe lead into the COM jack, then insert the red probe lead into the VΩ jack.

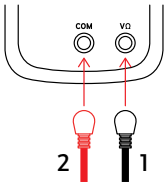

3 Verify multimeter is functional by touching probes together. The multimeter should beep, flash, or read 0Ω (ohms) of resistance.

4 Touch the red probe to the positive (+) wire and the black probe to the negative (-) wire of the luminaire. If a conductive path is formed between the positive and negative wires, the multimeter will beep, flash, or read 0Ω (ohms) of resistance. Troubleshoot to identify the malfunction in the line. If there is no conductive path formed, the multimeter will not show any feedback.

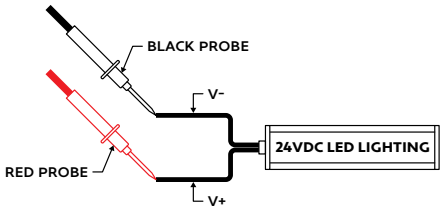

5 Touch the red probe to the luminaire extrusion and the black probe to the positive (+) wire. If a conductive path is formed between the extrusion and the positive wire, the multimeter will beep, flash, or read 0Ω (ohms). Troubleshoot to identify the malfunction in the line. If there is no conductive path, the multimeter will not show any feedback.

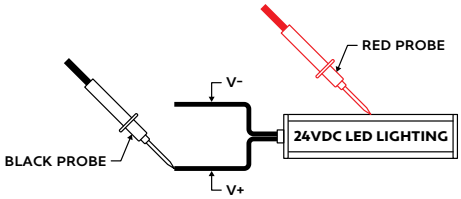

6 Touch the red probe to the luminaire extrusion and the black probe to the negative (-) wire. If a conductive path is formed between the extrusion and the negative wire, the multimeter will beep, flash, or read 0Ω (ohms). Troubleshoot to identify the malfunction in the line. If there is no conductive path, the multimeter will not show any feedback.

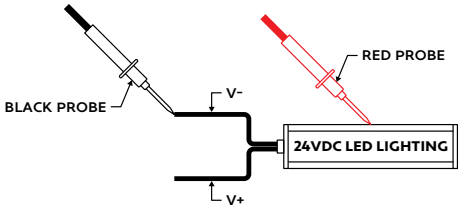

6 Set multimeter to DC voltage and test power source. Confirm the correct voltage before connecting luminaire to power source. If the voltage reading is more than 1 volt greater than the marked output voltage, there is a problem with the power source or driver.

6 Connect luminaire to power source via power connector. If LEDs do not turn on, flip the polarity (+/-) or power source connection to power connector.

© ALUZ All Rights Reserved. ALUZ reserves the right to make changes or withdraw specifications without prior notice.