A4 Series | Ingrade / Ground

ZERA Ingrade RGBW Line Voltage

(A4-ZERA-ING-RGBW)

READ ENTIRE GUIDE BEFORE STARTING INSTALLATION

Important Notice: Verify correct luminaire was received with correct color temperature, voltage, and wattage before cutting or installing. ALUZ will not be responsible if incorrect luminaire is installed.

GENERAL FEATURES

Applications	Ingrade Wall Washing, Wall Grazing, Column Highlighting, Directional Wayfinding Lighting
Lens	Tempered Glass Lens
Optics	10°, 30°, 10° x 60°, 30° x 60°, Asymmetric
Length	Built to Order (2', 3', or 4' Increments)
Construction	Aluminum Extrusion & Stainless Steel
Feed Point	A 1.74" hole is provided on the housing end cap. Use 1-1/4"schedule 40 pipe to bring power into fixtures. Pipe and fittings by others.
Weight	28 lbs (4'), 21 lbs (3'), 14 lbs (2')
Mounting	Concrete Pour Applications
Listing	Wet (IP67) Location UL1598, CSA C22.2#250.0 UL8750, CSA250 UL2108, 67.1.9, 60.4, CSA C22.2 #9
Temperature Ratings	Operating / Startup: -20° to 48°C (-4° to 120°F) Storage: -40° to 76°C (-40° to 170°F)
Installation Link	**Link to Installation Instructions** >

ELECTRICAL

Dimming	DMX
Maximum Run (Line Voltage Integral Driver)	48' (120V - Maximum 12 Fixtures @ 12W) 108' (277V - Maximum 27 Fixtures @ 12W)
Luminaire Voltage	120V - 277V **(UNV)**

SETBACK & SPACING RECOMMENDATIONS

Optic	Best Use	Setback	Spacing
10D	Wall Grazing	1/20th of Object Height or more	As Required
30D	Wall Grazing	1/10th of Object Height or more	As Required
10Dx60D	Wall Grazing	1/20th of Wall Height or more	Up to the Setback
30Dx60D	Wall Grazing	1/10th of Wall Height or more	Up to the Setback
ASM	Wall Washing	1/10th of Wall Height	Up to 2x the Setback
MKR	Direct View	Not Applicable	As Required

Setback: The distance from the fixture to the wall.
Spacing: The distance between fixture to fixture.
Note: The above recommendations are a starting point for a light design and are not required.
Specific design requirements may require further adjustment.

END VIEW / DIMENSIONS

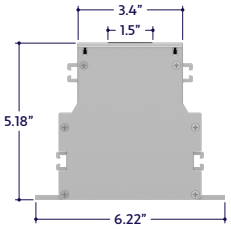

PRODUCT INFORMATION

- Inground lighting for Wall Washing, Wall Grazing, and Marker Applications
- Line Voltage Integral Driver
- Choose from a variety of LED Color Temperatures and Static Colors
- Available in 3 Watts per Foot up to 12 Watts per Foot
- Product is shipped in 1', 2', 3', or 4' lengths.
- Best used in outdoor hardscape applications.

ELECTRICAL REQUIREMENTS

- Line Voltage luminaires do not require a remote driver.
- Maximum Run @ 120VAC is 48' (Max. 12 Luminaires @ 12W Each).
- Maximum Run @ 277VAC is 108' (Max. 27 Luminaires @ 12W Each).

INSTALLATION TOOLS REQUIRED

- Electric Hammer Drill
- 14.4 to 28 Volt Cordless Drill
- Phillips Bits
- Utility Knife
- Electrical Cord
- Marker
- Wire Stripper
- Long Nose Pliers
- Drill Bits - Concrete or Wood
- Electrical Three Ways
- Safety Glasses
- Measuring Tape
- Laser Line or Chalk Line

1170 N Red Gum St, Anaheim, CA 92806

aluz.lighting info@aluz.lighting 866.ALUZ.LTG | 714.535.7900

© ALUZ All Rights Reserved. ALUZ reserves the right to make changes or withdraw specifications without prior notice.

WARNING

When using luminaires for any application, basic safety precautions should always be followed to reduce the risk of fire, electric shock, and personal injury. Luminaires must be installed in accordance with the NEC or CEC as applicable. ALUZ will not be responsible for damage or malfunction caused by the following:

- Ensure power is off before installation begins, during replacements, additions, or repairs.
- Do not use luminaires if damaged, such as broken boards, loose connections, or frayed wire insulation. Inspect before installing.
- Do not install luminaires in hazardous locations.
- Do not operate outdoor luminaires during daytime hours.
- Do not cover luminaires with any material. Covering may cause LEDs to overheat, melt, or ignite.
- Do not paint on or over fixture lens or LEDs. Paint or any other substance on lens or LEDs will cause a shift in color temperature.
- Soffit must be evenly painted with a neutral white to avoid color shift.
- Do not modify luminaires in the field.
- Do not overlap luminaires in any way. **(Fig. 1)**
- Luminaires have line voltage risk of shock. Consult factory for any malfunctions. Do not attempt to repair.
- Only use luminaire with specified rated voltages. Do not exceed the specified voltage for any luminaire.
- Do not use extrusion as a raceway for additional wire. Non-factory feed through wires inside luminaire will void warranty.
- Ground Fault Circuit Interrupter (GFCI) protections should be provided on circuits or outlets when luminaire is used for outdoor applications.
- Surge protector must be set up for electrical power system to avoid damaging lighting system.
- Do not make wiring connections without referring to wiring diagrams.
- Do not cut wire while energized. **(Fig. 2)**
- Do not connect DC output from remote drivers in parallel. Parallel connections interfere with dimming capabilities and result in feedback that damages drivers. **(Fig. 3)**
- Always mount channels and mounting clips on flat, even surfaces.
- Do not exceed maximum run lengths.
- Always follow sequence labeling for continuous runs. Continuous run segments are labeled in alphabetical order.
- Polarity of continuous run segments must be aligned.
- Do not assemble continuous runs prior to installing into mounting clips. Each segment must be installed one by one into mounting clips. The weight of the assembled segments will put strain on junctions, causing the board, pin, or terminals to break.
- Do not install continuous runs without a mounting clip at each junction between two luminaire segments.
- Do not secure luminaire with nails or like means that might damage the wiring inside. Only secure by using mounting clips.
- Do not mount luminaire inside tanks or enclosures of any kind.
- Do not install downward facing luminaires without set screws.
- Do not use improper screw head type on mounting clips. It will cause the mounting clip to open up and become dysfunctional.
- Do not modify mounting clips.
- Do not weld mounting clips to surface. Mounting clips must be mechanically attached with screws appropriate for mounting surface and weight of luminaire.
- Do not mount fixture with less than the minimum number of mounting clips required. See mounting clips section for details.
- Do not install mounting clips on uneven surfaces. Use shims to level out height of mounting clips if necessary.
- Do not install mounting clips after luminaires have been assembled. Install mounting clips first, then install luminaire into mounting clips.
- Do not force luminaire into a space that is too small.
- Do not force luminaire with cord grip into soffit. **(Fig. 4)**
- Do not install luminaire at an angle within a cove. Only install fixtures straight within a cove. **(Fig. 5)**
- Do not bend extrusion around radius.
- Do not submerge dry or wet location luminaire in any liquid.
- Do not install wet location in outdoor coves without proper drainage. **(Fig. 6)**
- Do not install luminaire in any area that is continuously exposed to flowing or pooling water, such as underneath drain pipes, sprinklers, fountains, misters, etc.
- Do not cut, puncture, or penetrate aluminum housing, end caps, or lens covers.
- Do not drop, bang, or rest weight upon luminaire.
- Do not apply excessive pressure to any part of luminaire.
- Do not remove end caps from luminaire.
- Do not bend power cord or continuous connector past permitted bend radius. Bending past permitted bend radius will break the seal of the cordgrip or damage the insulation. 3.5" minimum bend radius for Wet Location. 1.5" minimum bend radius for Dry Location **(Fig. 7)**
- Do not install in places where the power cord is subject to continuous flexing.
- Do not twist continuous connector or power cord.
- Do not hold, carry, or suspend luminaire by the power cord.
- Do not install on ceilings without mounting clips and set screws. **(Fig. 8)**

FIGURES

Figure 1

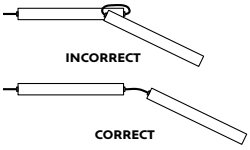

Figure 2

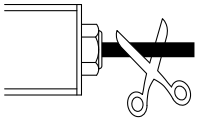

Fig. 3

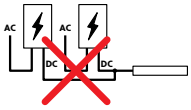

Figure 4

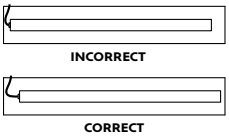

Figure 5

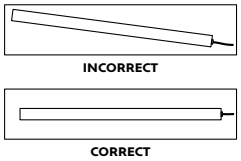

Figure 6

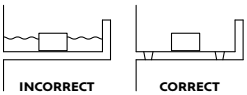

Figure 7

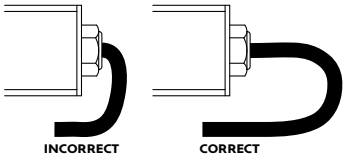

Figure 8

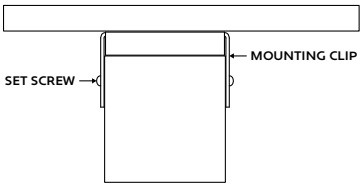

CLEANING MATERIALS

The use of solvents and/or cleaners which are not compatible with polycarbonate will result in the softening, crazing, and/or cracking of the plastic part. This is especially true of polycarbonate lamps and mounting bases which may be under stress in their normal applications.

COMPATIBLE WITH POLYCARBONATE

- Mild soap and water
- Mineral Spirits
- Isobutyl Alcohol
- VM and P Naphtha
- Varsol No.2
- Mexane
- Freone TF and TE-35
- Ethanol
- Dirtex
- 2% Sol. Reg. Joy
- 10% Sol Bon Ami
- White Kerosene
- Methyl Alcohol
- Heptane
- Petroleum Ether / 65°C
- Isopropyl Alcohol
- Lacryl PCL-2035 Polycarbonate Cleaner

NOT COMPATIBLE WITH POLYCARBONATE

- Trichlor
- Gasoline
- Liquid Detergents
- Acetone
- Carbon Tetrachloride
- Pink Lux (Phosphate free)
- Triclene
- Chlorinated Hydrocarbons
- #1 & #3 Denatured Alcohol
- Methyl Ethyl Keytone (MEK)
- Texize-8006, 8129, 8758
- MIBK
- Liquid Cleaner – 8211
- Toluol
- Agitene
- Benzol
- Ajax
- Kleenol Plastics
- Lysol
- Stanisol Naphtha
- Oils
- Lemon Joy (phosphate free)
- Diversol
- Lestoil

© ALUZ All Rights Reserved. ALUZ reserves the right to make changes or withdraw specifications without prior notice.

DIAGRAM OF ASSEMBLY (End View)

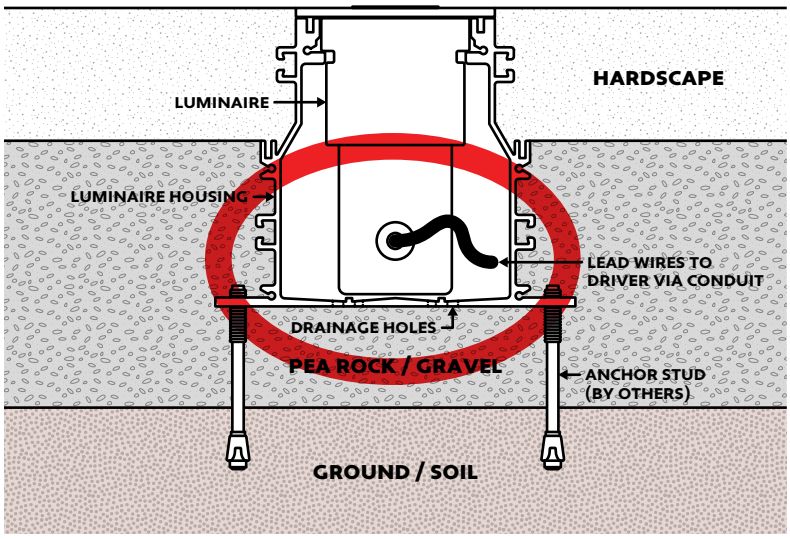

DIAGRAM OF ASSEMBLY (Side View)

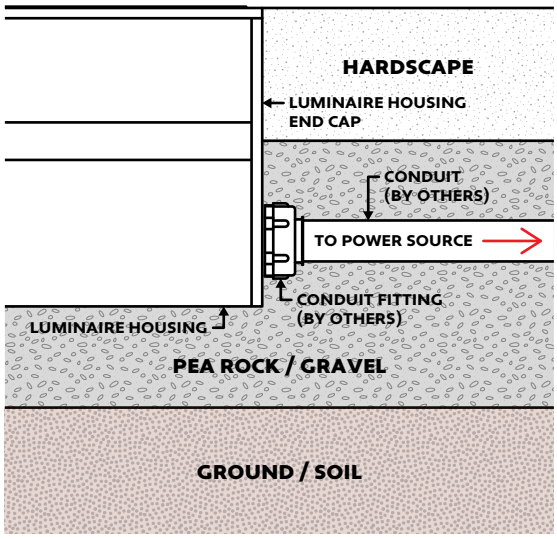

NOTES

- Conduit enters the luminaire housing through the end cap. Drill holes in the lower portion of the luminaire housing end cap.
- Conduit and conduit fittings (by others) size and style to be determined by installer.
- Refer to Step by Step instructions for additional details.

© ALUZ All Rights Reserved. ALUZ reserves the right to make changes or withdraw specifications without prior notice.

PREPARING LUMINAIRE HOUSING

1 Drill 1/4" holes in the bottom surface of each housing segment. Create at least 2 holes per foot, 1 on either side, and staggered throughout the length of the segment.
Note: Refer to Assembly Diagrams for details.

2 Test drainage capabilities by dumping water into housing and timing how fast it drains through the holes. Drill additional holes if more drainage is needed.

3 Lay luminaires along installation area in desired configuration. Measure the lengths and cut the housings to size accordingly.

4 Determine location of conduit feed point. Use the notch on the top of each luminaire segment to determine optic direction, then arrange accordingly. Drill holes as needed for conduit through the lower portion of the end cap.
Note: Conduit size and fittings by others. Size and style to be determined by installer.

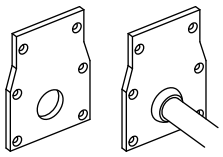

5 Install end caps to housings as needed using countersink screws.

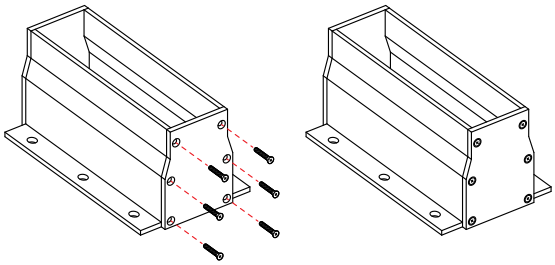

PREPARING INSTALLATION AREA

1 Prepare the ground surface for installation by ensuring it is evenly compacted and level throughout the installation area.

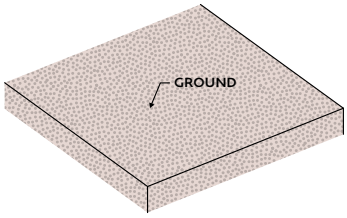

2 Pour at least 6" of pea rock or gravel evenly across entire installation area.

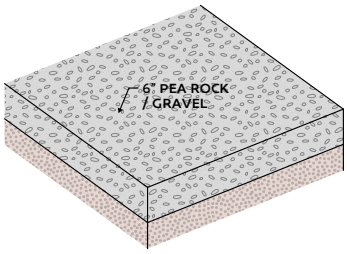

3 Lay housings in desired configuration and install anchor studs on both sides of the housing throughout the run.
Note: Size, style, and quantity of anchor studs (by others) to be determined by installer. Anchor studs must be sufficient to keep housing aligned and in place during installation process.

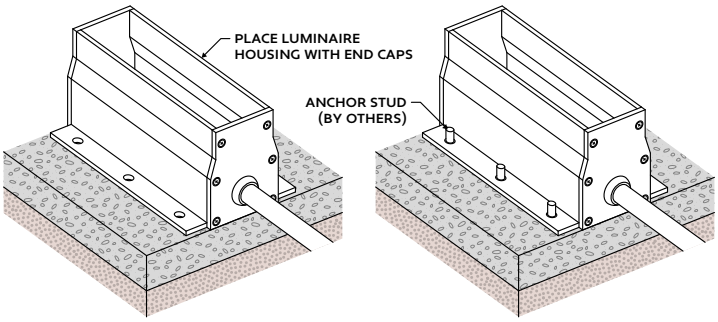

4 Once all housings are secured, dry fit the luminaire into the housing to ensure it fits properly. Make adjustments as needed and re-fit until it is precise. The luminaires should fit comfortably within the channel, with no significant gaps.

POURING CONCRETE & INSTALLING LUMINAIRE

1 After all housings are secured, install blockouts inside the top portion of channel. Blockouts must be installed throughout the entire length of luminaire housing.
Note: Blockouts help the channel retain its form while under pressure from the concrete pouring process and prevent material from entering the channel.

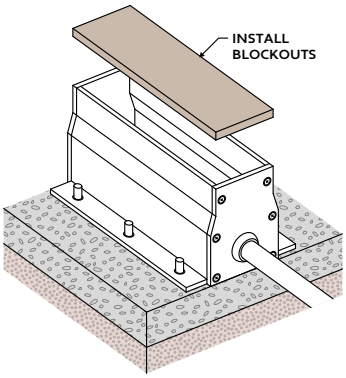

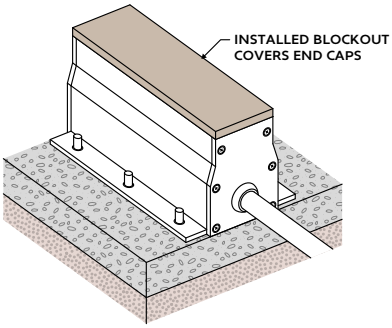

© ALUZ All Rights Reserved. ALUZ reserves the right to make changes or withdraw specifications without prior notice.

2 After blockouts are installed, pour additional pea rock or gravel to the indicated level per the below diagram.

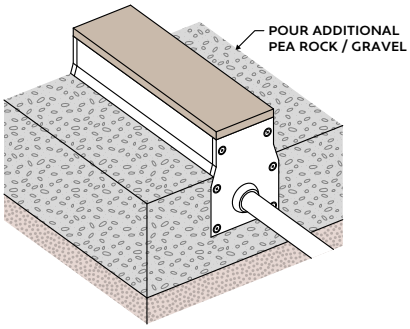

3 Pour concrete until it is level with the top of the assembly. Allow to dry completely before removing blockouts.

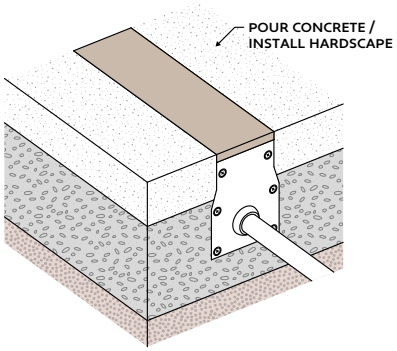

4 Remove blockouts only after concrete or hardscape is finished. The hardscape should sit slightly above the top of the channel.

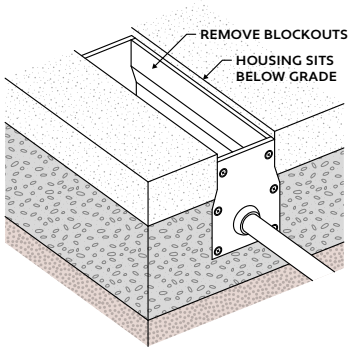

5 Lay luminaires along recessed housing and make wiring connections between luminaires if applicable. Slide a shrink tube over each connector for later use.

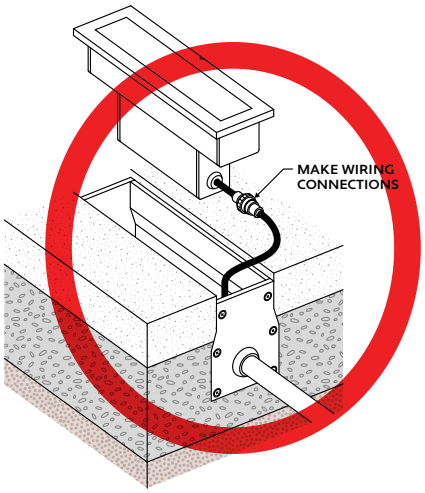

6 After all luminaires have been connected, perform a continuity test before connecting to power source.
Note: Refer to **Continuity Test** for details.

7 Once luminaires are confirmed to be working, power on to test the lighting and control functions.

8 After confirming power and functions, go back to each connection point and heat the shrink tube to seal each connection. The shrink tube will shrink down around the connector. Apply silicone around the ends to create a stronger seal.
Note: Do not use an open flame such as a lighter or torch to heat shrink tube.

9 Install each luminaire into the housing, ensuring the optic direction indicator is correctly oriented.

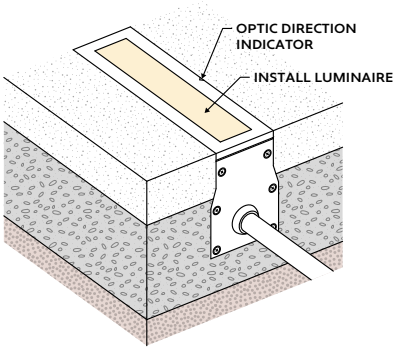

© ALUZ All Rights Reserved. ALUZ reserves the right to make changes or withdraw specifications without prior notice.

TROUBLESHOOTING TI

- Do not reset the breaker multiple times.
- If the unit is overloaded, the breaker will trip, shutting off the driver and lights.
- If the breaker reset button has been held down by hand or any type of pressure, such as duct tape, or if the breaker has been reset multiple times without troubleshooting, the unit will:
  - Burn the driver bobbin.
  - Burn the thermal or magnetic breaker.
  - Burn the driver lead wires due to high amperage caused by overload.
  - Short circuit in line which will not allow the breaker to reset.
  - Damage the lighting.

1 Turn off power before beginning. Check for any twisting or damage to the circuit in the LED lightstrip. If there is excessive damage and the circuit is broken, the lightstrip must be replaced.

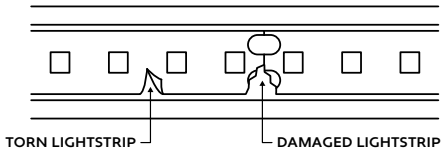

2 Check for metal particles or other foreign objects causing the short.

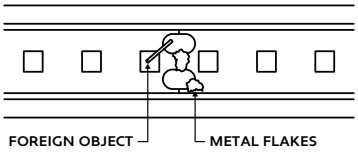

3 Check to make sure cuts in the lightstrip are clean and not frayed, causing positive and negative copper pads to touch.

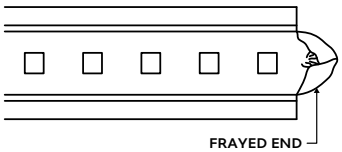

CONTINUITY TEST

A continuity test is performed to determine if electricity can pass through two points on an electrical circuit. This helps identify shorts or malfunctions in the luminaire. Use a multimeter or continuity tester to perform the steps below.

- Always perform a continuity test before connecting to power source.
- Malfunctions are not always as obvious as the lights not turning on.
- A short or malfunction in the line or luminaire will cause damage over time, irreparably damaging the lighting and voiding warranty.

1 Turn off power before beginning. Verify power is off by using a non-contact circuit tester (by others). Touch the probe of the tester to the positive wire of the power source. The tester will light up if an electrical current is detected.

2 Setup your multimeter tester (by others). First, insert the black probe lead into the COM jack, then insert the red probe lead into the VΩ jack.

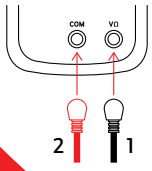

3 Touch the red probe to the luminaire extrusion and the black probe to the ground wire (green). If the luminaire is properly grounded, the multimeter will beep, flash, or read 0Ω (ohms). If there is no conductive path, the multimeter will not show any feedback. Troubleshoot to identify the malfunction in the ground wire.

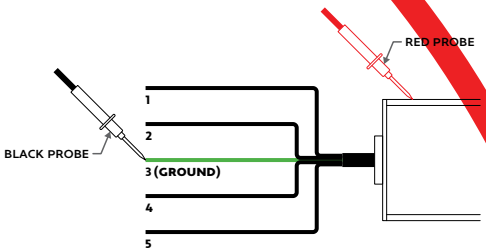

4 Touch the red probe to any wire and the black probe to each other wire. Repeat process for each wire. If a conductive path is formed between any of the wires, the multimeter will beep, flash, or read 0Ω (ohms). Troubleshoot to identify the malfunction in the line. If there is no conductive path, the multimeter will not show any feedback.
Example: Check for continuity between Wire 2 and Wire 4

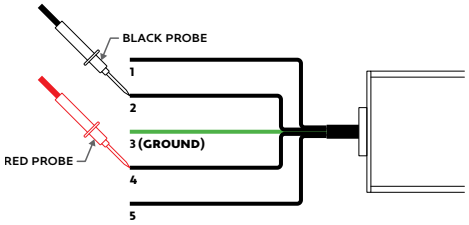

5 Touch the red probe to the luminaire housing and the black probe to each wire except ground. If a conductive path is formed between the housing and any of the wires, the multimeter will beep, flash, or read 0Ω (ohms). Troubleshoot to identify the malfunction in the line. If there is no conductive path, the multimeter will not show any feedback.

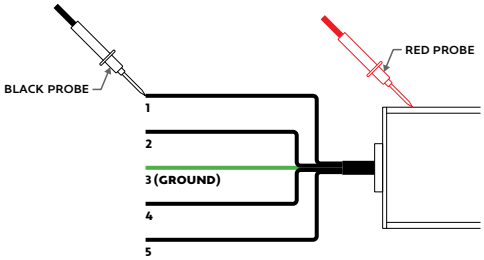

6 Set multimeter to AC voltage and test power source. Confirm the correct voltage before connecting luminaire to power source. If the voltage reading is more than 1 volt greater than the marked output voltage, there is a problem with the power source or driver.

7 Connect luminaire to power source. If LEDs do not turn on, troubleshoot to find the problem in the line.

© ALUZ All Rights Reserved. ALUZ reserves the right to make changes or withdraw specifications without prior notice.

A4 Series | Ingrade / Ground

ZERA Ingrade RGBW Line Voltage

(A4-ZERA-ING-RGBW)

Surge Protector

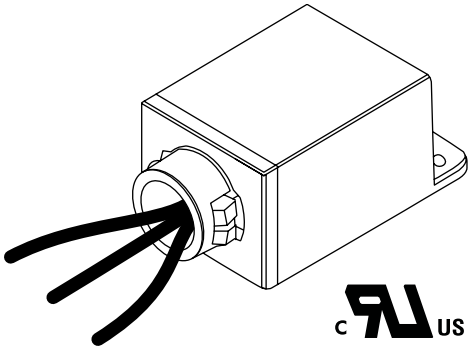

CASE DIMENSIONS

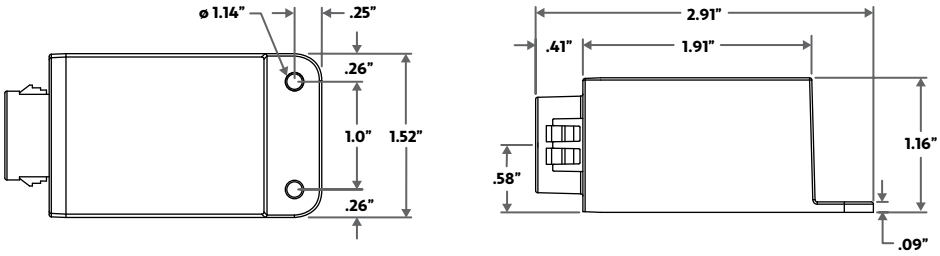

SURGE PROTECTOR SPECIFICATIONS

Model	Input Voltage	Surge Protection Level	Mounting	Enclosure Material	Input Needs	Input Frequency
ALS-SP	120V - 277V	0kV, 10kA, ANSI C62.41 Category C	SnapLOCK / Footed	Polycarbonate	6", 18AWG stranded, 105°C stripped, 3/8" tinned	60Hz

PRODUCT FEATURES

The Surge Series are 3-leaded devices that protect Line-Ground, Line-Neutral, and Neutral-Ground in accordance with IEEE / ANSI C62.41.2 guidelines. Protects against surges according to IE EE C62.41.2 C High (10kA and 10kV). Surge current rating = 10,000 Amps using industry standard 8/20 Sec wave. Surge Location Rated Category C3. UL Recognized Component in the United States and Canada (UL1449). Type 4 Surge Protection Device. High temperature, flame retardant plastic enclosure, 85°C maximum surface temperature rating. Thermally Protected Transient Over-voltage Circuit.

PRODUCT SPECIFICATIONS

The Surge series of products are designed to be used in conjunction with LED Drivers and fixtures to provide an additional level of protection against powerline disturbances in industrial, commercial and residential applications where surge protection to IEEE C62.41.2 is required.

DMX DIMMING WITH DECODER WIRING DIAGRAM

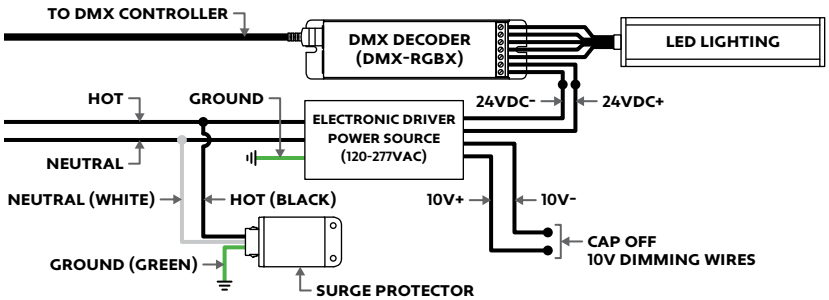

DMX DIMMING WITH ALL-IN-ONE DRIVER WIRING DIAGRAM

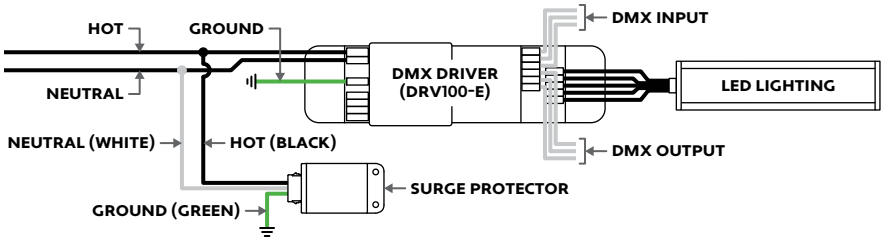

1170 N Red Gum St, Anaheim, CA 92806

aluz.lighting info@aluz.lighting 866.ALUZ.LTG | 714.535.7900

© ALUZ All Rights Reserved. ALUZ reserves the right to make changes or withdraw specifications without prior notice.